DISASSEMBLY INSTRUCTIONS

TV CHASSIS REMOVAL

1. Remove 4 push-on type control knobs from front panel of cabinet.
2. Remove 17 wood screws. Remove rear cover.
3. Remove 2 wood screws holding AC interlock bracket and 2 wood screws holding antenna terminal bracket.
4. Disconnect radio-phono power plug, speaker plug, audio plug, dial light plug, on/off volume and contrast control plug, front panel control plug, yoke plug, HV lead and picture tube socket.
5. Remove ion trap and centering magnet assembly.
6. Remove wing nut holding yoke and remove yoke.
7. Remove 3 bolts holding tuner assembly bracket to cabinet top.
8. Remove 4 chassis bolts. Remove chassis.
9. Remove 2 wood screws holding control panel assembly to cabinet, also unclip on/off volume and contrast control assembly from inside cabinet front.

RADIO CHASSIS

1. Remove 17 wood screws. Remove rear cover.
2. Remove radio-phono power plug and audio plug.
3. Remove 1 wood screw holding cable clamp to the rear of radio-phono drawer.
4. Lay cabinet on side on a soft surface.
5. Remove phono motor plug, phono input plug and 2 radio antenna plugs.
6. Remove 4 push-on type control knobs.
7. Remove 6 wood screws holding chassis mounting bracket.
8. Remove 7 metal screws holding chassis to drawer panel.

SPEAKER REMOVAL

1. Remove radio chassis from radio-phono drawer.
2. Disconnect plug from TV chassis.
3. Remove 4 speaker nuts. Remove speaker.

NOTE: If it is necessary to remove TV chassis for servicing, it is also necessary to remove the speaker. The audio output transformer is mounted on the speaker and must be connected for proper operation.

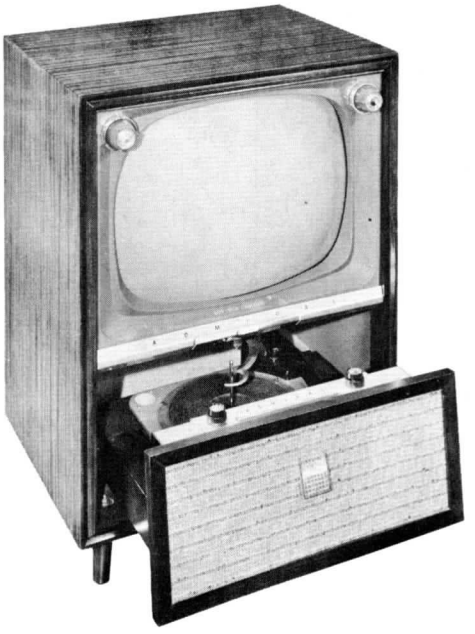

MODELS	CHASSIS
K23A6, K23A7	19Y4G, 19Y4GF

Radio Chassis 3D1B or 3D1C

ADMIRAL CHASSIS 19Y4G, GF, & Radio Chassis 3D1B

SERVICING IN THE FIELD

TUNER OSCILLATOR ADJUSTMENTS

Touch-up adjustments of the VHF tuner oscillator circuit may be accomplished by removing the channel selector and fine tuning knobs.

PICTURE TUBE SAFETY GLASS CLEANING

Remove 4 push-on type control knobs. Remove 4 wood screws holding metal strip at the top edge of the safety glass. Remove metal strip and safety glass. Use extreme caution when removing safety glass.

SERVICE ADJUSTMENT LOCATION

See tube placement chart on page 5.

HORIZONTAL OSCILLATOR FIELD ADJUSTMENT

Adjustment of the horizontal oscillator circuit may be made by adjusting the flexible shaft at the back of set. Adjust the horizontal adjustment slug of L22 until the picture synchronizes horizontally.

SOUND IF DETECTOR BUZZ ADJUSTMENT

To eliminate "Sound IF Detector Buzz" adjust the ratio detector secondary (L21) located on rear of chassis. (See tube location chart).

FUSES

One fuse is used for LV power supply protection. (For location see tube placement chart).

CENTERING

Centering is accomplished mechanically by adjusting two magnetic rings around the neck of the picture tube, located flush against the deflection yoke. Rotate the two rings around the neck of the tube until the picture is properly centered.

HOWARD W. SAMS & CO., INC. • Indianapolis 5, Indiana

"The listing of any available replacement part herein does not constitute in any case a recommendation, warranty or guaranty by Howard W. Sams & Co., Inc., as to the quality and suitability of such replacement part. The numbers of these parts have been compiled from information furnished to Howard W. Sams & Co., Inc., by the manufacturers of the particular type of replacement part listed." "Reproduction or use, without express permission, of editorial or pictorial content, in any manner, is prohibited. No patent liability is assumed with respect to the use of the information contained herein. Copyright 1956 by Howard W. Sams & Co., Inc., Indianapolis 5, Indiana, U. S. of America. Copyright under international Copyright Union. All rights reserved under Inter-American Copyright Union (1910) by Howard W. Sams & Co., Inc." Printed in U. S. of America

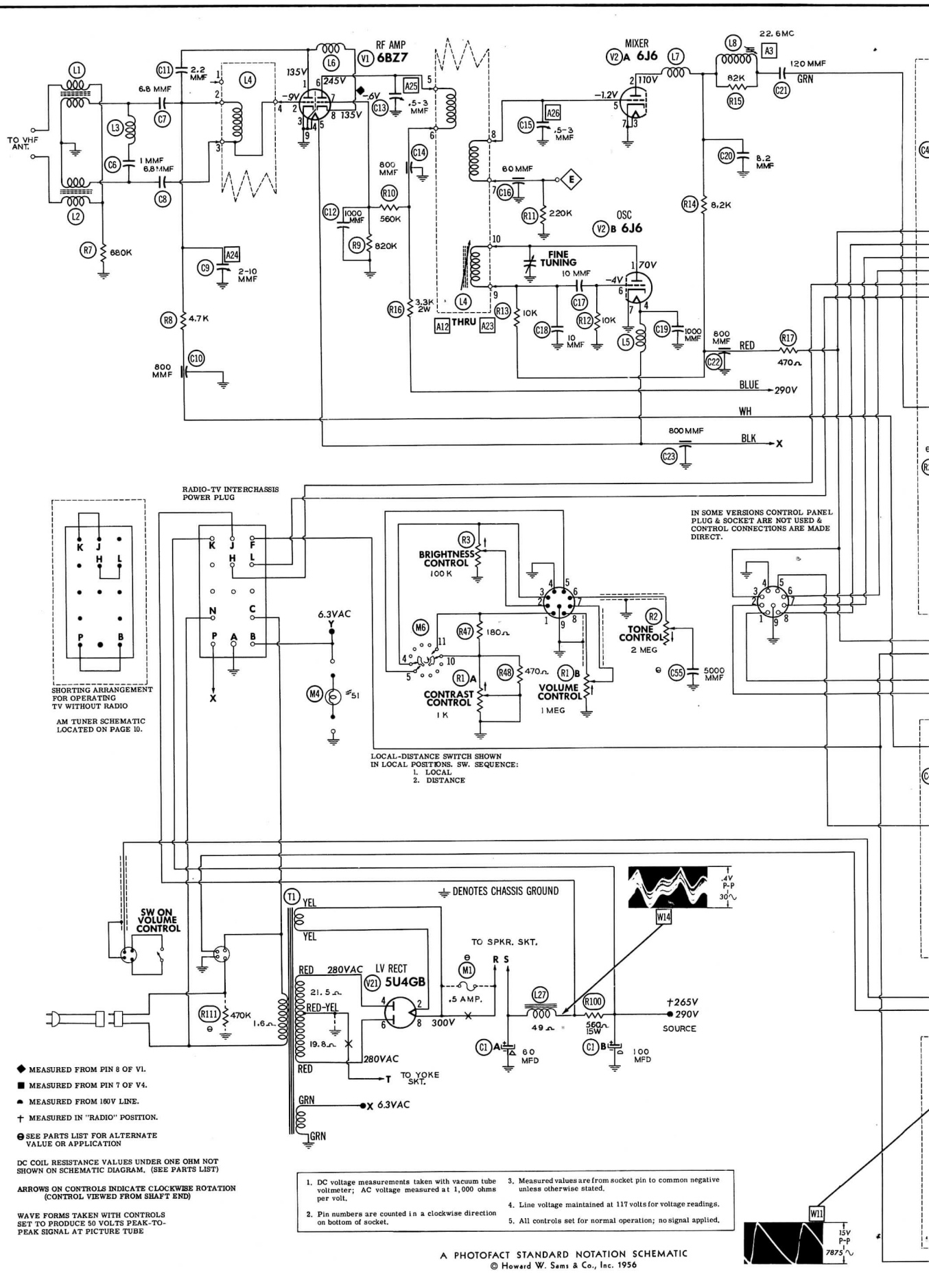
RF AMP
6BZ7
MIXER
6J6
OSC
6J6
22.6MC
TO VHF ANT.
FINE TUNING
THRU
RADIO-TV INTERCHASSIS POWER PLUG
SHORTING ARRANGEMENT FOR OPERATING TV WITHOUT RADIO
AM TUNER SCHEMATIC LOCATED ON PAGE 10.
BRIGHTNESS CONTROL 100 K
CONTRAST CONTROL 1 K
VOLUME CONTROL 1 MEG
TONE CONTROL 2 MEG
IN SOME VERSIONS CONTROL PANEL PLUG & SOCKET ARE NOT USED & CONTROL CONNECTIONS ARE MADE DIRECT.
LOCAL-DISTANCE SWITCH SHOWN IN LOCAL POSITIONS. SW. SEQUENCE:
1. LOCAL
2. DISTANCE
SW ON VOLUME CONTROL
DENOTES CHASSIS GROUND
TO SPKR. SKT.
LV RECT
5U4GB
280VAC
TO YOKE SKT.
6.3VAC
+265V
290V
SOURCE
BLUE
290V
WH
BLK
X
RED
470Ω
MEASURED FROM PIN 8 OF V1.
MEASURED FROM PIN 7 OF V4.
MEASURED FROM 160V LINE.
MEASURED IN "RADIO" POSITION.
SEE PARTS LIST FOR ALTERNATE VALUE OR APPLICATION
DC COIL RESISTANCE VALUES UNDER ONE OHM NOT SHOWN ON SCHEMATIC DIAGRAM. (SEE PARTS LIST)
ARROWS ON CONTROLS INDICATE CLOCKWISE ROTATION (CONTROL VIEWED FROM SHAFT END)
WAVE FORMS TAKEN WITH CONTROLS SET TO PRODUCE 50 VOLTS PEAK-TO-PEAK SIGNAL AT PICTURE TUBE
1. DC voltage measurements taken with vacuum tube voltmeter; AC voltage measured at 1,000 ohms per volt.
2. Pin numbers are counted in a clockwise direction on bottom of socket.
3. Measured values are from socket pin to common negative unless otherwise stated.
4. Line voltage maintained at 117 volts for voltage readings.
5. All controls set for normal operation; no signal applied.
A PHOTOFACT STANDARD NOTATION SCHEMATIC
© Howard W. Sams & Co., Inc. 1956

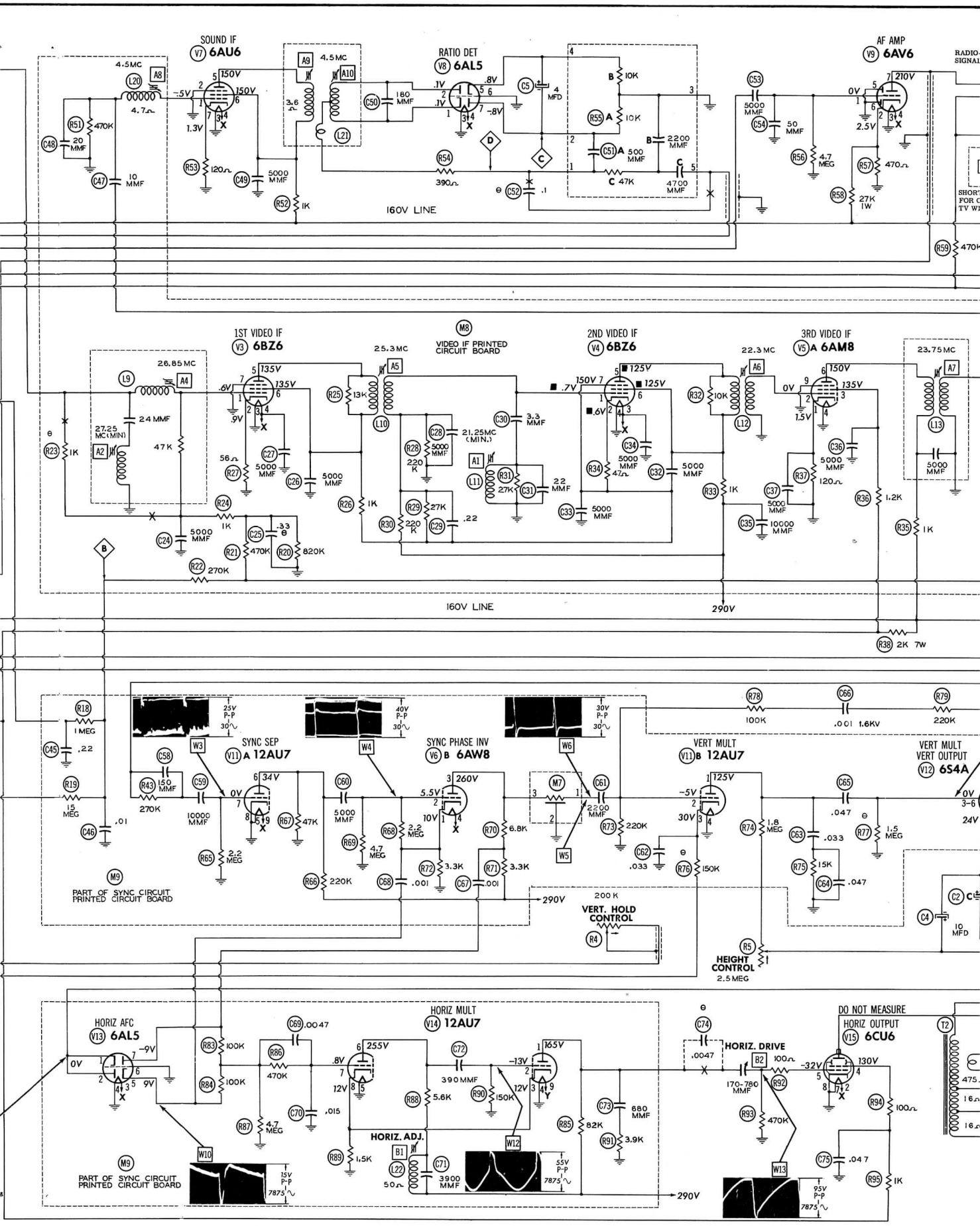
SOUND IF
V7 6AU6
4.5MC
A8
L20
4.7Ω
R51 470K
C48 20 MMF
C47 10 MMF
R53 120Ω
C49 5000 MMF
R52 1K
A9
4.5MC
A10
L21
3.6 Ω
C50 180 MMF
RATIO DET
V8 6AL5
R54 390Ω
C52 .1
C5 4 MFD
R55 10K
R55 A 10K
C51 A 500 MMF
B 2200 MMF
C 47K
C 4700 MMF
160V LINE
AF AMP
V9 6AV6
C53 5000 MMF
C54 50 MMF
R56 4.7 MEG
R57 470Ω
R58 27K 1W
R59 470K
1ST VIDEO IF
V3 6BZ6
26.85MC
A4
L9
24 MMF
27.25 MC(MIN)
A2
47K
R23 1K
R24 1K
C24 5000 MMF
R21 470K
C25 .33
R20 820K
R22 270K
R25 13K
L10
R26 1K
C26 5000 MMF
C27 5000 MMF
R27 56Ω
25.3MC
A5
M8
VIDEO IF PRINTED CIRCUIT BOARD
C28 21.25MC (MIN.)
R28 5000 MMF
220 K
R29 27K
R30 220 K
C29 .22
A1
L11
R31 27K
C31 22 MMF
C30 3.3 MMF
2ND VIDEO IF
V4 6BZ6
C33 5000 MMF
C34 5000 MMF
R34 47Ω
C32 5000 MMF
R32 10K
L12
R33 1K
22.3MC
A6
3RD VIDEO IF
V5 A 6AM8
C36 5000 MMF
R37 120Ω
C37 5000 MMF
C35 10000 MMF
R36 1.2K
R35 1K
23.75MC
A7
L13
5000 MMF
R38 2K 7W
160V LINE
290V
R18 1 MEG
C45 .22
R19 15 MEG
C46 .01
M9
PART OF SYNC CIRCUIT PRINTED CIRCUIT BOARD
SYNC SEP
V11 A 12AU7
C58 150 MMF
R43 270K
C59 10000 MMF
R65 2.2 MEG
R67 47K
W3
25V P-P 30~
SYNC PHASE INV
V6 B 6AW8
C60 5000 MMF
R69 4.7 MEG
R68 2.2 MEG
R66 220K
C68 .001
R72 3.3K
C67 .001
R70 6.8K
R71 3.3K
W4
40V P-P 30~
W6
30V P-P 30~
M7
W5
C61 2200 MMF
R73 220K
C62 .033
R76 150K
VERT MULT
V11 B 12AU7
R74 1.8 MEG
C63 .033
R75 15K
C64 .047
C65 .047
R77 1.5 MEG
R78 100K
C66 .001 1.6KV
R79 220K
VERT MULT
VERT OUTPUT
V12 6S4A
C2
C4 10 MFD
290V
200 K
VERT. HOLD CONTROL
R4
R5
HEIGHT CONTROL
2.5 MEG
HORIZ AFC
V13 6AL5
R83 100K
R84 100K
C69 .0047
R86 470K
C70 .015
R87 4.7 MEG
W10
M9
PART OF SYNC CIRCUIT PRINTED CIRCUIT BOARD
15V P-P 7875~
HORIZ MULT
V14 12AU7
C72 390 MMF
R88 5.6K
R90 150K
R89 1.5K
HORIZ. ADJ.
B1
L22 50Ω
C71 3900 MMF
W12
55V P-P 7875~
R85 82K
C73 680 MMF
R91 3.9K
290V
C74 .0047
HORIZ. DRIVE
B2
100Ω
170-780 MMF
R92
R93 470K
W13
95V P-P 7875~
DO NOT MEASURE
HORIZ OUTPUT
V15 6CU6
T2
R94 100Ω
C75 .047
R95 1K

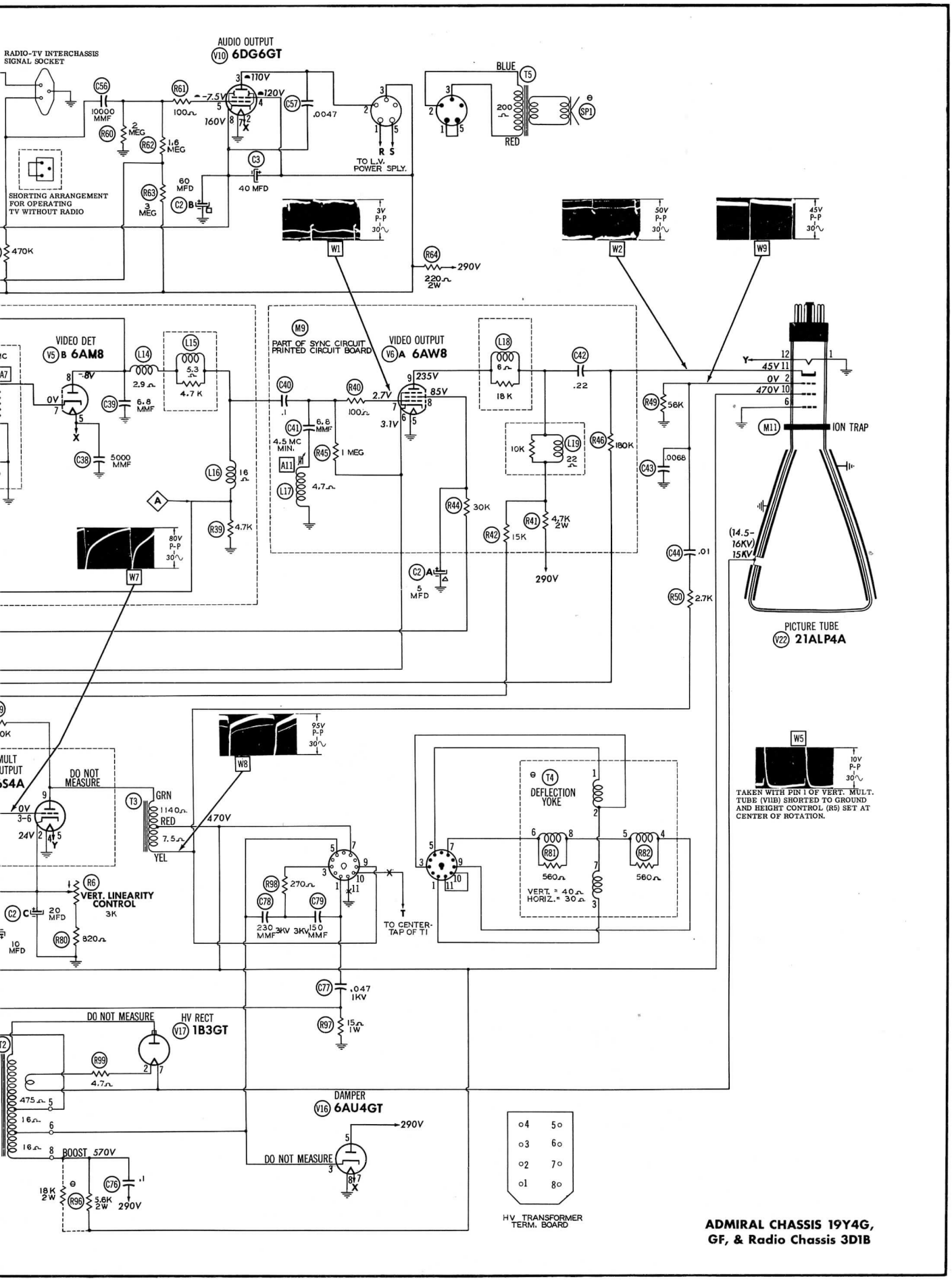

ADMIRAL CHASSIS 19Y4G, GF, & Radio Chassis 3D1B

ADMIRAL CHASSIS 19Y4G, GF, & Radio Chassis 3D1B

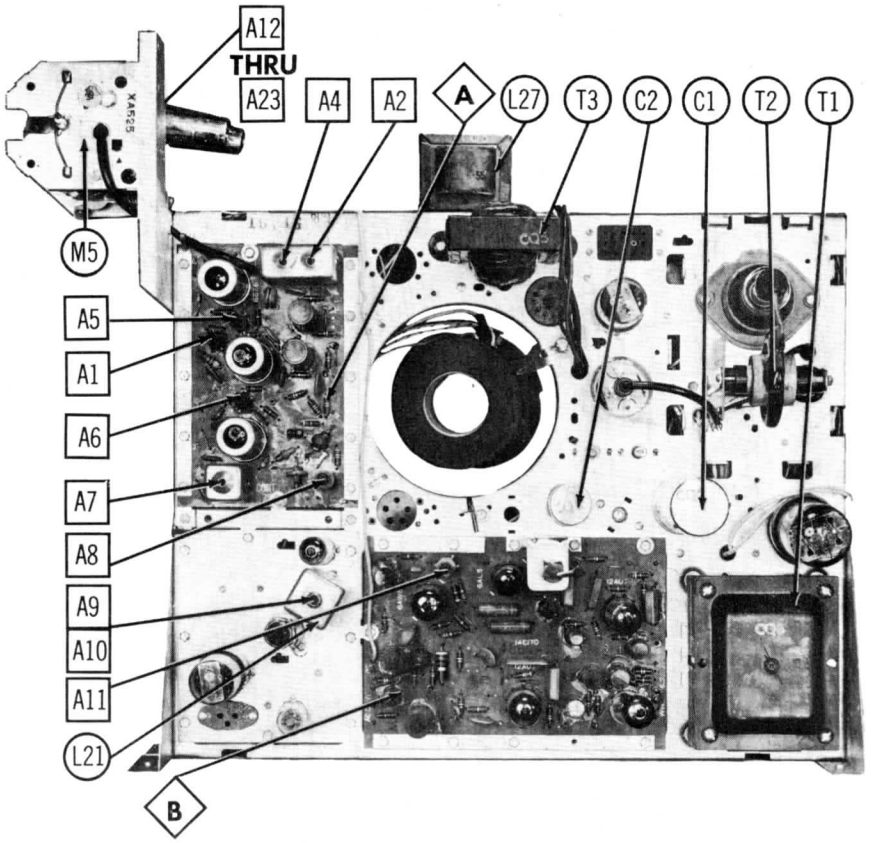

CHASSIS TOP VIEW

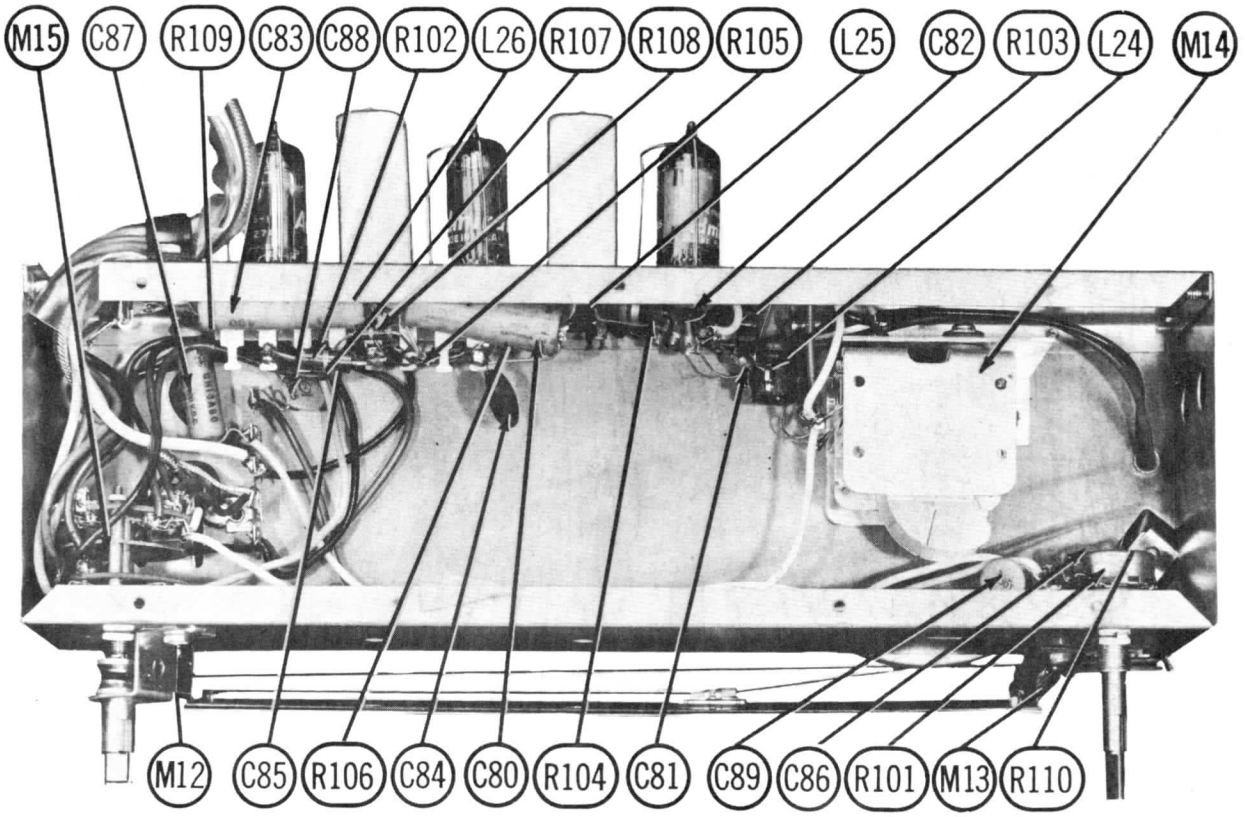

RADIO CHASSIS-BOTTOM VIEW

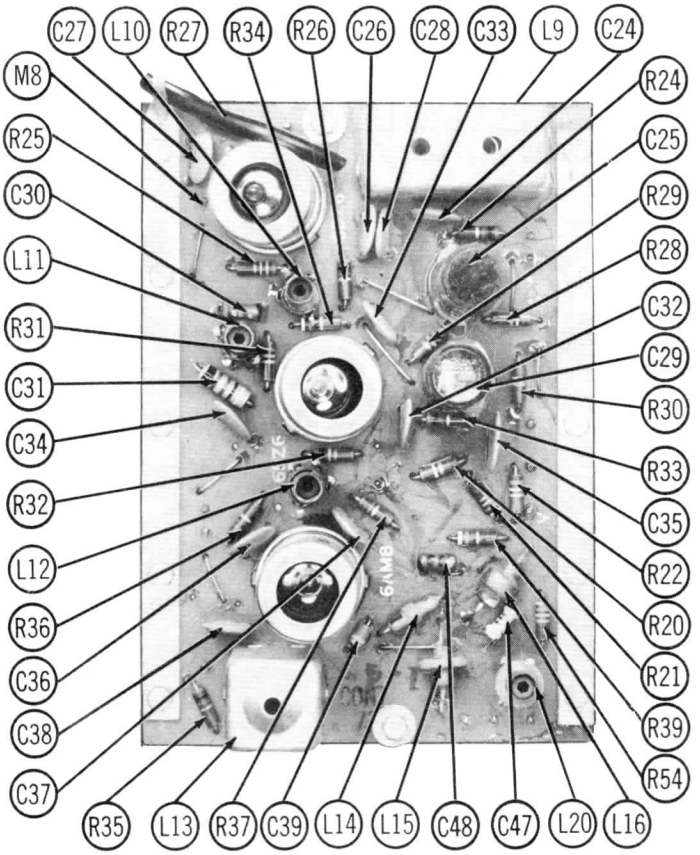

VIDEO IF SUB-CHASSIS

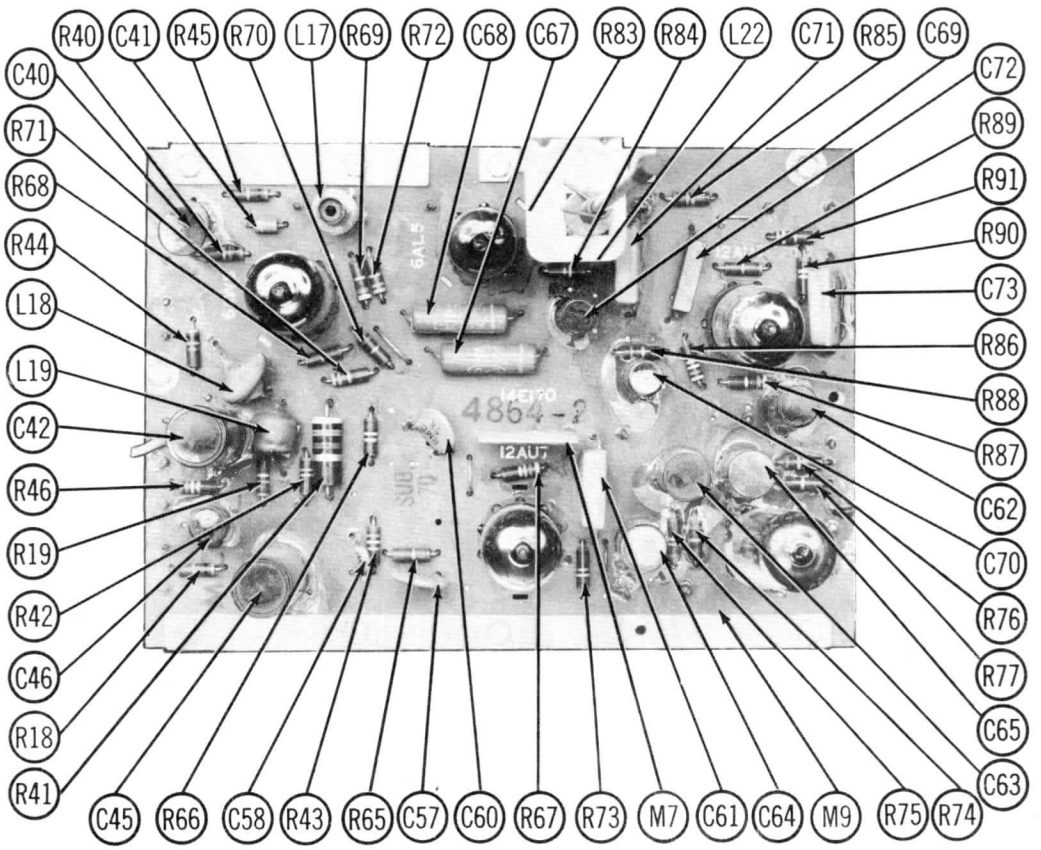

SYNC CIRCUIT SUB-CHASSIS

TUBE PLACEMENT CHART

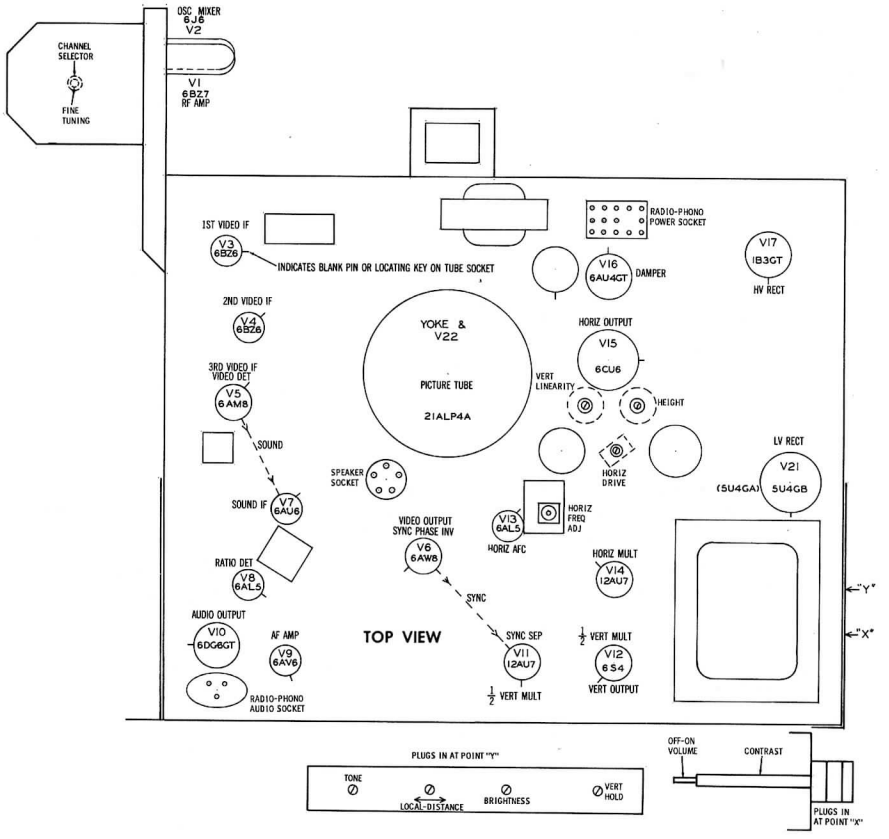

TUBE FAILURE CHECK CHART

The following chart lists tubes whose failures are most likely to produce the indicated symptoms. Refer to tube placement chart for location and type of tube.

POWER SUPPLY FAILURE
No raster, no sound - V21, Fuse (M1)

LOSS OF PICTURE OR SOUND
No pic, no sound, has raster - V2, V3, V4, V5, V10
No pic, no sound, has snow - V1, V2, V3
No pic, has sound, has raster - V6, V22
Has pic, no sound - V7, V8, V9, V10

SYNC FAILURE
No vert. sync - V6, V11, V12
No horiz. sync - V6, V13, V14
No vert. or horiz. sync - V6, V11

SWEEP FAILURE
No raster, has sound - V14, V15, V16, V17, V22
No vertical deflection - V11, V12
Poor vert. linearity or foldover - V11, V12
Poor horiz. linearity or foldover - V14, V15, V16
Narrow picture - V14, V15, V16, V17, V21
Vert. off freq. - V6, V11, V12
Horiz. off freq. - V6, V13, V14

ALIGNMENT INSTRUCTIONS

ALIGNMENT INSTRUCTIONS—READ CAREFULLY BEFORE ATTEMPTING ALIGNMENT

The high voltage leads should be securely taped away from chassis.

VIDEO IF ALIGNMENT

Remove the converter tube (V2) from its socket and replace with a 6J6 having pin 1 removed.
Disconnect antenna leads and short the antenna terminals with a short clip lead.
Set the contrast control to minimum contrast.
Connect the negative lead of a 3 volt bias battery to point (B). Connect positive to chassis.
Use only enough generator output to provide useable indication on the VTVM (1 volt maximum).
Allow 15 to 20 minutes for test equipment and receiver warm-up period.

	DUMMY ANTENNA	SIGNAL GENERATOR COUPLING	SIGNAL GENERATOR FREQUENCY	CHANNEL	CONNECT VTVM	ADJUST	REMARKS
1.	Direct	High side to ungrounded tube shield floating over dummy converter. Low side to chassis.	21.25MC	Any unused high band channel	DC probe thru decoupling network (Fig. 1) to point (A). Common to chassis.	A1	Adjust for MINIMUM deflection.
2.	"	"	27.25MC	"	"	A2	"
3.	"	"	22.6MC	"	"	A3	Adjust for maximum deflection.
4.	"	"	26.85MC	"	"	A4	"
5.	"	"	25.3MC	"	"	A5	"
6.	"	"	22.3MC	"	"	A6	"
7.	"	"	23.75MC	"	"	A7	"

OVERALL VIDEO IF RESPONSE CHECK

Leave bias connected as under "Video IF Alignment".
Use only enough sweep generator output to provide useable pattern on scope.
Connect the synchronized sweep voltage from the sweep generator to the horizontal input of the oscilloscope for horizontal deflection.

	DUMMY ANTENNA	SWEEP GENERATOR COUPLING	SWEEP GENERATOR FREQUENCY	MARKER GENERATOR FREQUENCY	CHANNEL	CONNECT SCOPE	ADJUST	REMARKS
8	Direct	High side to ungrounded tube shield floating over dummy converter tube. Low side to chassis.	23MC (Unmod)	21.25MC 22.0MC 23.0MC 25.0MC 25.75MC	Any unused high band channel	Vert. Amp. thru decoupling network (Fig. 1) to point (A). Low side to chassis.		Check for response similar to Fig. 2. If necessary, retouch A1, thru A7 to obtain desired response. Adjust A4 and A5 for position of 25.75MC marker and amplitude of response curve on high frequency side. Adjust A3 and A6 for position of 23.0MC marker and amplitude of response curve on low frequency side.

SOUND IF ALIGNMENT USING AM SIGNAL GENERATOR AND VTVM

Disconnect antenna and short antenna terminals together.
Set contrast control for minimum contrast.

	DUMMY ANTENNA	SIGNAL GENERATOR COUPLING	SIGNAL GENERATOR FREQUENCY	CHANNEL	CONNECT VTVM	ADJUST	REMARKS
9.	.01MFD	High side to pin 8 (plate) of 6AM8 (V5). Low side to chassis.	4.5MC (Unmod.)	Any non-interfering channel	DC probe to point (C). Common to chassis.	A8, A9	Attenuate generator output to maintain 1 volt at VTVM. Adjust for maximum deflection.
10.	"	"	"	"	DC probe to point (D). Common to chassis.	A10	Adjust for zero reading. A positive and negative reading will be obtained on either side of the correct setting.

SOUND IF ALIGNMENT USING FM SIGNAL GENERATOR AND OSCILLOSCOPE

Use frequency modulated signal with 60~ modulation and 450KC sweep. Use 120~ sawtooth voltage in scope for horizontal deflection.

	DUMMY ANTENNA	SWEEP GENERATOR COUPLING	SWEEP GENERATOR FREQUENCY	MARKER GENERATOR FREQUENCY	CHANNEL	CONNECT SCOPE	ADJUST	REMARKS
9.	.01MFD	High side to pin 8 (plate) of 6AM8 (V5). Low side to chassis.	4.5MC (450KC Swp.)	4.5MC	Any	Vert. amp. to point (C). Low side to chassis.	A8, A9	Disconnect stabilizing capacitor C5. Adjust for curve of maximum amplitude and symmetry similar to Fig. 3.
10.	"	"	"	"	"	Vert. amp. to point (D). Low side to chassis.	A10	Reconnect C5. Adjust A10 so that 4.5MC marker occurs at center of crossover lines as in Fig. 4. SLIGHTLY retouch A9 for maximum amplitude and straightness of crossover lines.

SOUND IF ALIGNMENT USING ON THE AIR SIGNAL

Remove the bias battery and replace the original tuner oscillator tube in its socket. Tune in a TV station. Adjust A8 and A9 for maximum deflection with the VTVM connected as in step 9 of "Sound IF Alignment Using AM Signal Generator and VTVM". Adjust A10 for best program sound with minimum buzz. This point will be found between two maximum buzz peaks.

4.5MC TRAP ALIGNMENT

Short L15 with a short jumper wire.

	DUMMY ANTENNA	SIGNAL GENERATOR COUPLING	SIGNAL GENERATOR FREQUENCY	CHANNEL	CONNECT VTVM	ADJUST	REMARKS
11.	.01MFD	High side to pin 8 (plate) of 6AM8 (V5). Low side to chassis.	4.5MC (Unmod.)	Any	DC probe to point (C). Common to chassis.	A11	Adjust for MINIMUM deflection.

ALTERNATE 4.5MC TRAP ALIGNMENT

Tune in a TV station and adjust A11 for minimum 4.5MC beat interference in picture.

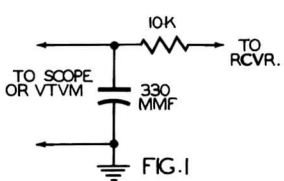

FIG. 1

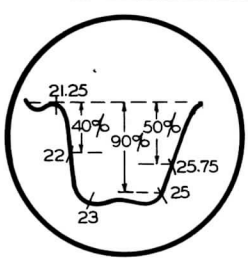

FIG. 2

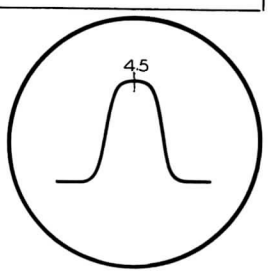

FIG. 3

ALIGNMENT INSTRUCTIONS (cont)

OSCILLATOR ALIGNMENT

Replace original oscillator tube in its socket. The channel oscillator adjustments screws are reached through a hole to the left and just below the channel switch shaft. The correct adjustment screws are accessible through this hole as the channel switch is turned to each channel.
Leave bias connected as under "Video IF Alignment".
Connect the synchronized sweep voltage from the sweep generator to the horizontal input of the oscilloscope for horizontal deflection.
The sweep generator output lead should be terminated with its characteristic impedance, usually 50Ω.
Set the fine tuning control to the mid-position of its range.

	DUMMY ANTENNA	SWEEP GENERATOR COUPLING	SWEEP GENERATOR FREQUENCY	MARKER GENERATOR FREQUENCY	CHANNEL	CONNECT SCOPE	ADJUST	REMARKS
12.	Two 120Ω Carbon Resistors	Across antenna terminals with 120Ω in each lead.	213MC (10MC Swp.)	211. 25MC 215. 75MC	13	Vert. amp. thru decoupling network (Fig. 1) to point Ⓐ. Low side to chassis.	A12	Adjust to place video marker at 50% as in Fig. 5. Sound marker should not exceed 5% on response curve.
			207MC (10MC Swp.)	205. 25MC 209. 75MC	12		A13	
			201MC (10MC Swp.)	199. 25MC 203. 75MC	11		A14	
			195MC (10MC Swp.)	193. 25MC 197. 75MC	10		A15	
			189MC (10MC Swp.)	187. 25MC 191. 75MC	9		A16	
			183MC (10MC Swp.)	181. 25MC 185. 75MC	8		A17	
			177MC (10MC Swp.)	175. 25MC 179. 75MC	7		A18	
			85MC (10MC Swp.)	83. 25MC 87. 75MC	6		A19	
			79MC (10MC Swp.)	77. 25MC 81. 75MC	5		A20	
			69MC (10MC Swp.)	67. 25MC 71. 75MC	4		A21	
			63MC (10MC Swp.)	61. 25MC 65. 75MC	3		A22	
			57MC (10MC Swp.)	55. 25MC 59. 75MC	2		A23	

RF AND MIXER ALIGNMENT

Leave bias connected as under "Video IF Alignment". The bias supply may be removed if it is difficult to obtain a response of sufficient amplitude. If bias is removed, short out to chassis point where bias was connected.

	DUMMY ANTENNA	SWEEP GENERATOR COUPLING	SWEEP GENERATOR FREQUENCY	MARKER GENERATOR FREQUENCY	CHANNEL	CONNECT SCOPE	ADJUST	REMARKS
13.	Two 120Ω Carbon Resistors	Across antenna terminals with 120Ω in each lead.	195MC (10MC Swp.)	193. 25MC 197. 75MC	10	Vert. amp. thru 10KΩ to point Ⓔ. Low side to chassis.	A24, A25, A26	Adjust for response similar to Fig. 6 with markers above 90%.
14.	"	"	213MC (10MC Swp.)	211. 25MC 215. 75MC	13			Check for response similar to Fig. 6. If markers fall below 70% on any channel, make SLIGHT compromise adjustments of A24, A25 and A26 with channel switch set to that channel. Recheck all other channels to see that they have not been seriously affected.
			207MC (10MC Swp.)	205. 25MC 209. 75MC	12			
			201MC (10MC Swp.)	199. 25MC 203. 75MC	11			
			189MC (10MC Swp.)	187. 25MC 191. 75MC	9			
			183MC (10MC Swp.)	181. 25MC 185. 75MC	8			
			177MC (10MC Swp.)	175. 25MC 179. 75MC	7			
			85MC (10MC Swp.)	83. 25MC 87. 75MC	6			
			79MC (10MC Swp.)	77. 25MC 81. 75MC	5			
			69MC (10MC Swp.)	67. 25MC 71. 75MC	4			
			63MC (10MC Swp.)	61. 25MC 65. 75MC	3			
			57MC (10MC Swp.)	55. 25MC 59. 75MC	2			

RADIO ALIGNMENT

Remove the bias supply.
Turn the function switch to the "Radio" position.
Loop should be maintained in same relative position to chassis as when receiver is in cabinet.
Volume control should be at maximum position. Output of signal generator should be no higher than necessary to obtain an output reading. Use an insulated alignment screwdriver for adjusting.

	DUMMY ANTENNA	SIGNAL GENERATOR COUPLING	SIGNAL GENERATOR FREQUENCY	BAND SWITCH POS.	RADIO DIAL SETTING	OUTPUT METER	ADJUST	REMARKS
15.	.1MFD	High side to antenna stator lug on tuning gang. Low side to chassis.	455KC (Unmod.)	Radio	Tuning gang fully open	Across voice coil	A27,A28 A29,A30	Adjust for maximum output.
16.	"	"	1620KC	"	"	"	A31	"
17.	"	Loop	1400KC	"	Tune to 1400KC signal	"	A32	Fashion loop of several turns of wire and radiate signal into loop of receiver. Adjust for maximum output.

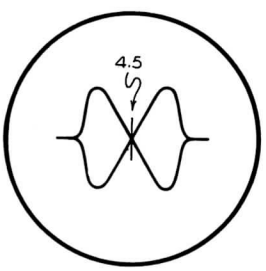

FIG. 4

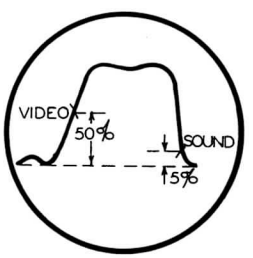

FIG. 5

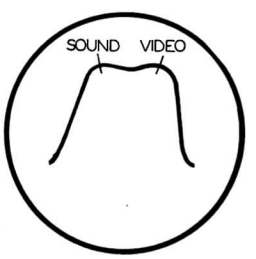

FIG. 6

RESISTANCE MEASUREMENTS

Item	Tube	Pin 1	Pin 2	Pin 3	Pin 4	Pin 5	Pin 6	Pin 7	Pin 8	Pin 9
V 1	6BZ7	INF	1. 2Meg	0Ω	0Ω	. 1Ω	† 3. 3KΩ	350KΩ	INF	0Ω
V 2	6J6	■ 11KΩ	■ 8. 7KΩ	0Ω	. 1Ω	220KΩ	10KΩ	0Ω		
V 3	6BZ6	300KΩ	56Ω	0Ω	. 1Ω	▲ 1KΩ	▲ 1KΩ	0Ω		
V 4	6BZ6	100KΩ	▲ 47Ω	. 1Ω	0Ω	† 1KΩ	† 1KΩ	130KΩ		
V 5	6AM8	120Ω	. 4Ω	■ 3. 2KΩ	0Ω	. 1Ω	■ 1KΩ	. 3Ω	4. 7KΩ	0Ω
V 6	6AW8	3. 3KΩ	1. 5Meg	† 10KΩ	. 1Ω	0Ω	200Ω	1Meg	■ 30KΩ	† 4. 7KΩ
V 7	6AU6	470KΩ	0Ω	0Ω	. 1Ω	■ 1KΩ	■ 1KΩ	120Ω		
V 8	6AL5	INF	INF	0Ω	. 1Ω	10KΩ	0Ω	10KΩ		
V 9	6AV6	4. 7Meg	470Ω	0Ω	. 1Ω	0Ω	0Ω	† 470KΩ		
V 10	6DG6GT	TP	. 1Ω	† 450Ω	† 270Ω	850KΩ	TP	0Ω	20KΩ	
V 11	12AU7	▰ 3Meg	220KΩ	220KΩ	0Ω	0Ω	† 100KΩ	2. 2Meg	0Ω	. 1Ω
V 12	6S4	NC	1. 2KΩ	1. 5Meg	0Ω	. 1Ω	1. 5Meg	NC	NC	▰ 6KΩ
V 13	6AL5	15Ω	15Ω	. 1Ω	0Ω	4. 8Meg	0Ω	4. 8Meg		
V 14	12AU7	† 82KΩ	150KΩ	1. 5KΩ	0Ω	0Ω	† 5. 6KΩ	5Meg	1. 5KΩ	. 1Ω
V 15	6CU6	TP	. 1Ω	TP	■ 3KΩ	470KΩ	TP	0Ω	0Ω	TOP CAP ▰ 16Ω
V 16	6AU4GT	NC	TP	300KΩ	NC	† 49Ω	TP	. 1Ω	0Ω	
V 17	1B3GT		PINS	1-8	HAVE	INF	RESISTANCE			TOP CAP ▰ 490Ω
V 18	6BE6	22KΩ	. 7Ω	0Ω	♦ . 1Ω	♦† 1. 6KΩ	♦† 14KΩ	♦ 1. 2Meg		
V 19	6BA6	♦ 1. 2Meg	0Ω	0Ω	♦ . 1Ω	♦† 1. 6KΩ	♦† 100KΩ	150Ω		
V 20	6AV6	4. 7Meg	0Ω	0Ω	♦ . 1Ω	♦ 1. 2Meg	♦ 300KΩ	♦† 470KΩ		
V 21	5U4GB	NC	100KΩ	NC	22Ω	NC	20Ω	NC	100KΩ	
V 22	21ALP4A	0Ω	56KΩ	PIN 6 0Ω	PIN 10 ▰ 5. 6KΩ	PIN 11 ■ 200KΩ	PIN 12 . 1Ω			

† MEASURED FROM PIN 8 OF V21.
■ MEASURED FROM 160V LINE.
▲ MEASURED FROM PIN 7 OF V4.
▰ MEASURED FROM PIN 3 OF V16.
♦ MEASURED IN "RADIO" POSITION.
TP-TIE POINT.
NC-NO CONNECTION.

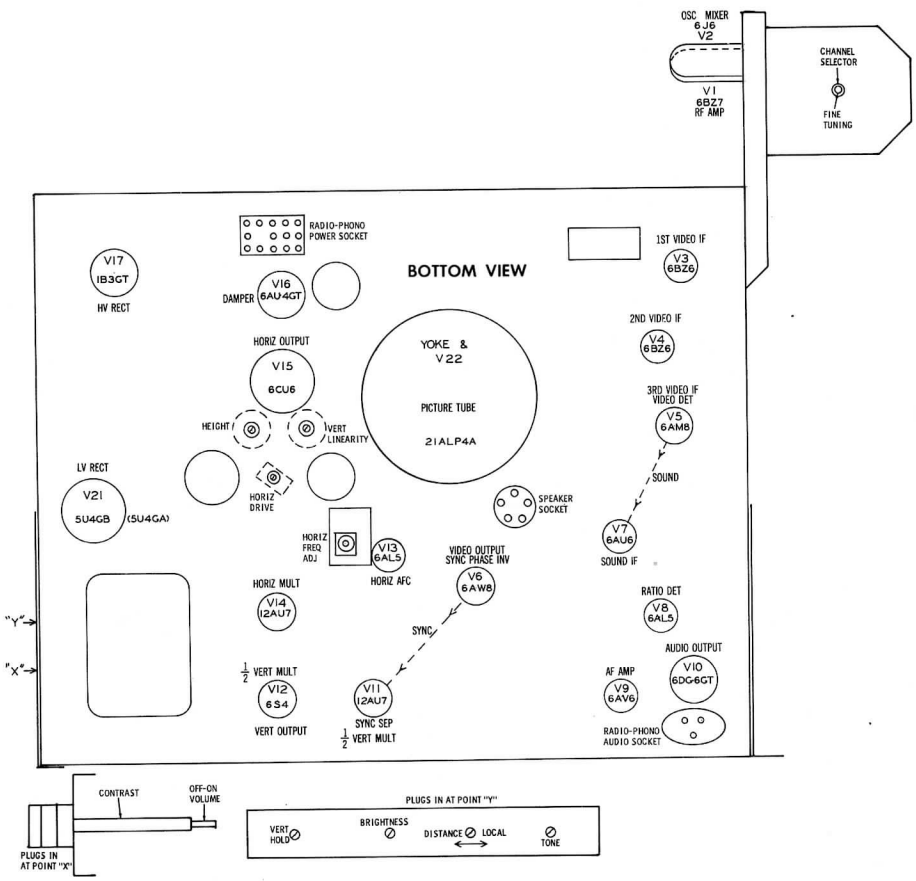

TUBE PLACEMENT CHART

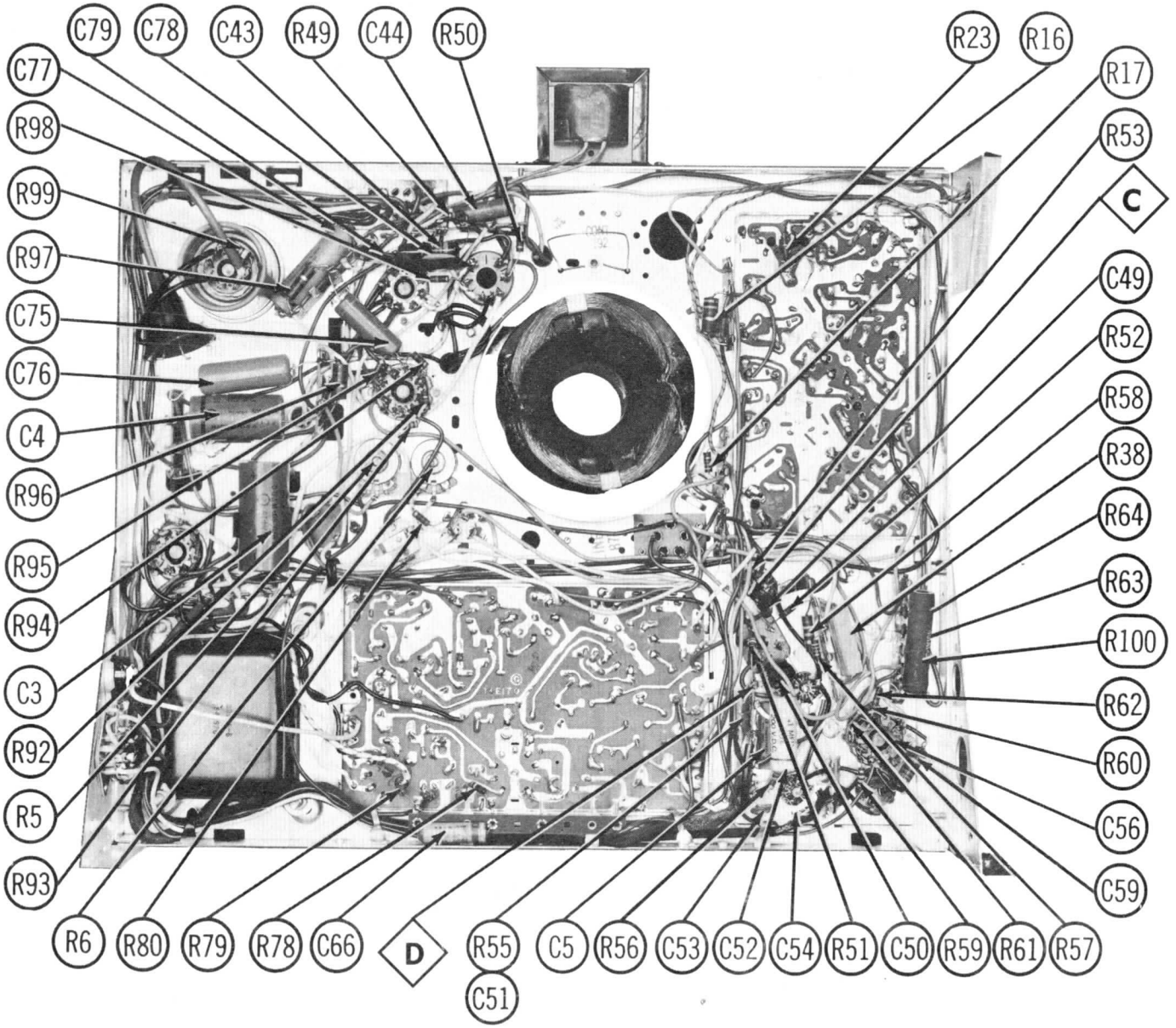

CHASSIS BOTTOM VIEW CAPACITOR & RESISTOR IDENT.

ADMIRAL CHASSIS 19Y4G,
GF, & Radio Chassis 3D1B

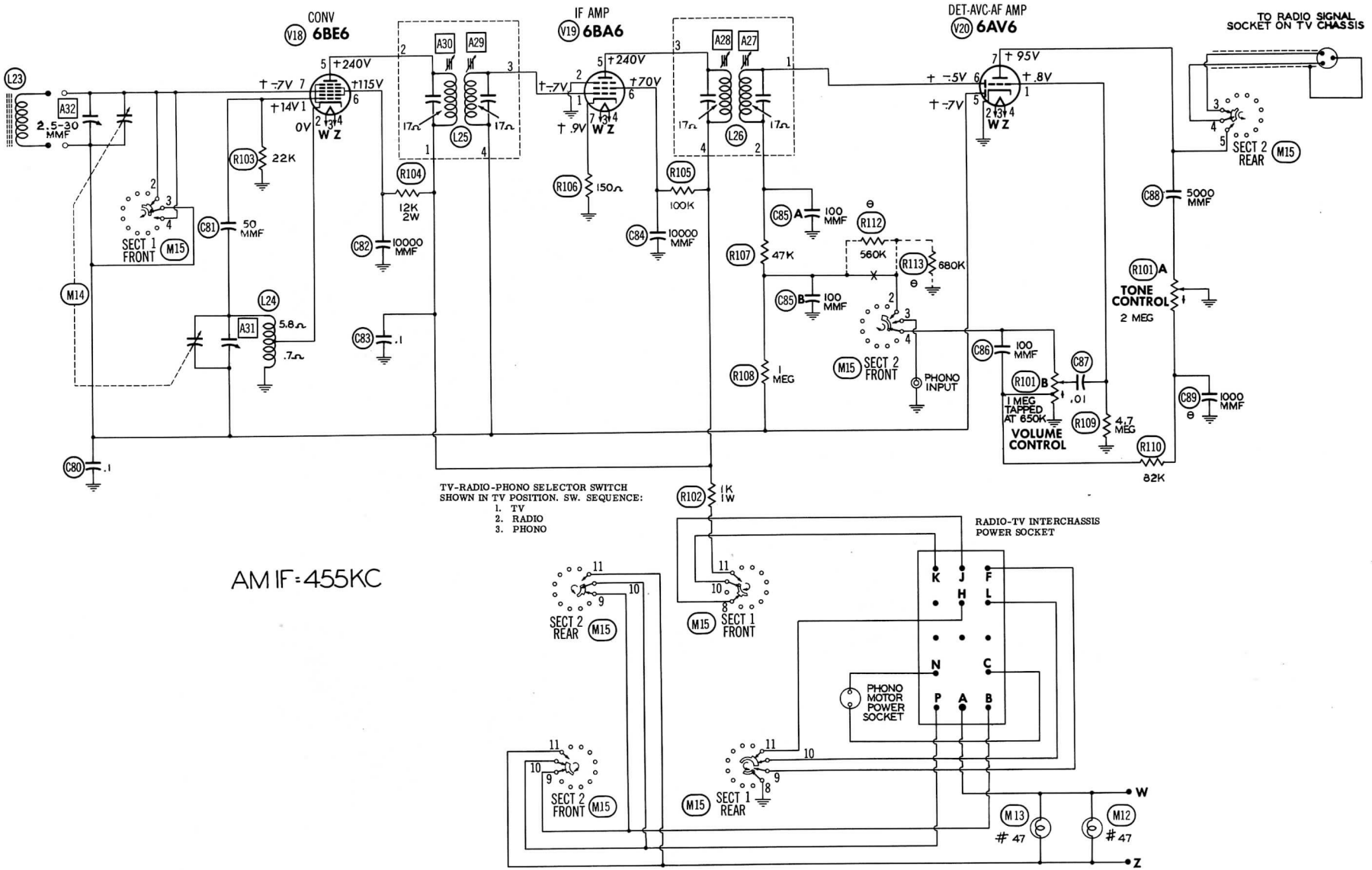

AM TUNER 3DIB AND 3DIC

A PHOTOFACT STANDARD NOTATION SCHEMATIC
© Howard W. Sams & Co., Inc. 1956

AM RADIO TUNER SCHEMATIC

PARTS LIST AND DESCRIPTIONS

TUBES (GENERAL ELECTRIC, SYLVANIA)

ITEM No.	USE	REPLACEMENT DATA: ADMIRAL PART No.	REPLACEMENT DATA: STANDARD REPLACEMENT	NOTES
V1	RF Amplifier	6BZ7	6BZ7	
V2	Mixer-Oscillator	6J6	6J6	
V3	1st. Video IF Amplifier	6BZ6	6BZ6	
V4	2nd. Video IF Amplifier	6BZ6	6BZ6	
V5	3rd. Video IF Amplifier-Video Detector	6AM8	6AM8	
V6	Video Output-Sync Phase Inverter	6AW8	6AW8	
V7	Sound IF Amplifier	6AU6	6AU6	
V8	Ratio Detector	6AL5	6AL5	
V9	AF Amplifier	6AV6	6AV6	
V10	Audio Output	6DG6GT	6DG6GT	
V11	Sync Separator- Vert. Mult.	12AU7	12AU7	
V12	Vert. Mult.-Vert. Output	6S4A	6S4A	
V13	Horiz. AFC	6AL5	6AL5	
V14	Horiz. Mult.	12AU7	12AU7	
V15	Horiz. Output	6CU6	6CU6	
V16	Damper	6AU4GT	6AU4GT	
V17	HV Rectifier	1B3GT	1B3GT	
V18	AM Converter	6BE6	6BE6	
V19	AM IF Amplifier	6BA6	6BA6	
V20	Det.-AVC-AF Amplifier	6AV6	6AV6	
V21	LV Rectifier	5U4GB	5U4GB	

CATHODE-RAY TUBE

ITEM No.	REPLACEMENT DATA: ADMIRAL PART No.	REPLACEMENT DATA: CBS PART No.	REPLACEMENT DATA: GENERAL ELECTRIC PART No.	REPLACEMENT DATA: SYLVANIA PART No.	NOTES
V22	21ALP4A ①	21ALP4A ① 21ALP4B ① 21ALP4	21ALP4A ① 21ALP4A/B ① 21ALP4	21ALP4A ② 21ALP4A/B ② 21ALP4	① Aluminized ② Silver screen "85"

ELECTROLYTIC CAPACITORS

ITEM No.	RATING: CAP.	RATING: VOLT.	REPLACEMENT DATA: ADMIRAL PART No.	AEROVOX PART No.	CORNELL-DUBILIER PART No.	MALLORY PART No.	PYRAMID PART No.	SANGAMO PART No.	SPRAGUE PART No.
C1A	▲60	350	67D15-110	AFH3-29-25		FP330.9	TM-2030	D-177	R2074
B	▲100	350							
C2A	▲5	200	67D15-109	E92C2		FP217.8	TM-3123	T-395	R1652
B	■60	200				TC50X		FM-4504	
C	20	50							
C3	40	300	67A4-19	PRS350V40	BBR4035	TC78	TD-40-350	FM-4540	TVA-1611
C4	10	475	67A4-22	PRS500V10	BBR1050	TC81	TD-10-475	MT-4710	TVA-1802
C5	4	50	67A4-9	SRE50V5	BBR4-50T	TC30	TD-4-50	MMT-0505	TVA-1303

FIXED CAPACITORS

Capacity values given in the rating column are in mfd. for Paper Capacitors, and in mmfd. for Mica and Ceramic Capacitors.

ITEM No.	RATING: CAP.	RATING: VOLT	REPLACEMENT DATA: ADMIRAL PART No.	AEROVOX PART No.	CENTRALAB PART No.	CORNELL-DUBILIER PART No.	ERIE PART No.	MALLORY PART No.	SPRAGUE PART No.	NOTES
C6	1			NPO-SI1	TCZ-1	TZ03	NPOA-010	ZT-5515	5TCCB-V1	
C7	6.8		94D47-53	NPO-DI6.8	TCZ-6R8	Z013	NPOA-6R8	ZT-5568	5TCCB-V68	
C8	6.8		94D47-53	NPO-DI6.8	TCZ-6R8	Z013	NPOA-6R8	ZT-5568	5TCCB-V68	
C9	2-10		94D92-71		829-10					
C10	800		94C37-90							
C11	2.2		94C37-97	NPO-SI2.2	TCZ-2R2	Z006	NPOA-2R2		5TCCB-V22	
C12	1000		94C37-90	BPD-001	DD-102	K069	801-001	DC-521	5HK-D1	
C13	.5-3		98A45-23		829-3		3115-01-0R5	CT565A		
C14	800		94C37-90							
C15	.5-3		98A45-23		829-3		3115-01-0R5	CT565A		
C16	60		94D92-76							
C17	10		94D47-51							
C18	10		94D47-51							
C19	1000		94C37-90	BPD-001	DD-102	K069	801-001	DC-521	5HK-D1	
C20	8.2		94D92-74	NPO-DI8.2		Z016	NPOA-8R2			
C21	120		65C6-66	BPD-00012	DD-121	G044	811-121	UC-5312	5GA-T12	
C22	800		94C37-90							
C23	800		94C37-90							
C24	5000		65C43-1	BPD-005	DD-502	K080	811-005	DC-525	5HK-D5	
C25	.33	200	64B16-50							Note 3
C26	5000		65C43-1	BPD-005	DD-502	K080	811-005	DC-525	5HK-D5	
C27	5000		65C43-1	BPD-005	DD-502	K080	811-005	DC-525	5HK-D5	
C28	5000		65C43-1	BPD-005	DD-502	K080	811-005	DC-525	5HK-D5	
C29	.22	200	64B16-51					PTS4022		
C30	3.3		65C6-89	NPO-SI3.3	TCZ-3R3	TZ06	NPOA-3R3	ZT-5533	5TCCB-V33	
C31	22		65C6-113	NPO-SI22	TCZ-22	TZ14	NPOK-220		5TCC-Q22	
C32	5000		65C43-1	BPD-005	DD-502	K080	811-005	DC-525	5HK-D5	
C33	5000		65C43-1	BPD-005	DD-502	K080	811-005	DC-525	5HK-D5	
C34	5000		65C43-1	BPD-005	DD-502	K080	811-005	DC-525	5HK-D5	
C35	10000		65C43-2	BPD-01	DD-103	K082	811-01	DC-511	5HK-S1	
C36	5000		65C43-1	BPD-005	DD-502	K080	811-005	DC-525	5HK-D5	
C37	5000		65C43-1	BPD-005	DD-502	K080	811-005	DC-525	5HK-D5	
C38	5000		65C43-1	BPD-005	DD-502	K080	811-005	DC-525	5HK-D5	
C39	6.8		65B28-068	NPO-SI6.8	TCZ-6R8	TZ08	NPOA-6R8	ZT-5568	5TCCB-V68	
C40	.1	200	64B16-53		DF-104			PTS401		
C41	6.8		65B28-068	NPO-SI6.8	TCZ-6R8	TZ08	NPOA-6R8	ZT-5568	5TCCB-V68	
C42	.22	400	64B16-28					PTS4022		
C43	.0068	600	64B9-14	BPD-0068	D6-682	CUB6D68	GP3-333-682		6TM-D68	
C44	.01	600	64B9-13	BPD-01	D6-103	CUB6S1	GP3-333-103	PT611	6TM-S1	
C45	.22	200	64B16-51					PTS4022		
C46	.01	200	64B16-59	BPD-01	D6-103	K082	GP3-333-103	PTS411	5HK-S1	
C47	10		65C6-44	NPO-SI10	TCZ-10	TZ09	NPOK-100	ZT-541	5TCC-Q1	
C48	20		65C6-51	NPO-SI20	TCZ-20	TZ13	NPOK-200	ZT-542	5TCC-Q2	
C49	5000		65D10-5	BPD-005	DD-502	K080	811-005	DC-525	5HK-D5	
C50	180		65D10-52							
C51A	500				D6-501	K061	GP2K-501	UC-535	5GA-T5	
B	2200		†63C6-15	†PA445	DD-222	K073	811-0022	UC-5222	5GA-D22	
C	4700				DD-472	K079	811-0047	DC-525	5HK-D47	

PARTS LIST AND DES

CAPACITORS (cont)

ITEM No.	RATING CAP.	RATING VOLT	REPLACEMENT DATA ADMIRAL PART No.	AEROVOX PART No.	CENTRALAB PART No.	CORNELL-DUBILIER PART No.	ERIE PART No.	MALLORY PART No.	SPRAGUE PART No.	NOTES
C52	.1	200		P288N-1	DF-104	CUB2P1		PT401	2TM-P1	Note 1
C53	5000		65D10-5	BPD-005	DD-502	K080	811-005	DC-525	5HK-D5	
C54	50		65C6-4	SI50	D6-500	TP30	GP1K-500	UC-545	5GA-Q5	
C55	5000		65D10-5	BPD-005	DD-502	K080	811-005	DC-525	5HK-D5	Note 2
C56	10000		65C43-2	BPD-01	DD-103	K082	811-01	DC-511	5HK-S1	
C57	.0047	600		BPD-0047	DD-472	CUB6D47	GP2-333-472	PT6247	6TM-D47	
C58	150		65D10-85	BPD-00015	DD-151	G046	811-151	UC-5315	5GA-T15	
C59	10000		65C43-2	BPD-01	DD-103	K082	811-01	DC-511	5HK-S1	
C60	5000		65D10-5	BPD-005	DD-502	K080	811-005	DC-525	5HK-D5	
C61	2200	500	65B21-222	1464-0022		1R5D22			MS-222	
C62	.033	200	64B16-56							
C63	.033	600	64B15-10							
C64	.047	400	64B16-32	BPD-05	DF-503			PTS4147		
C65	.047	600	64B16-9	BPD-05	DF-503					
C66	.001	1600	64A2-28	HVD-30-001	DD30-102	CUB16D1	3KV-102	DC3021	MB-D1	
C67	.001	400	64B21-1	SI1000	D6-102	CUB6D1	GP2L-102	PT621	6TM-D1	
C68	.001	400	64B21-1	SI1000	D6-102	CUB6D1	GP2L-102	PT621	6TM-D1	
C69	.0047	400	64B16-38	BPD-0047	DD-472	K079	811-0047	PTS6247	5HK-D47	
C70	.015	200	64B16-58	BPD-015	DD16-153		821-015		10HKB-S15	
C71	3900	500	65B21-392	1464-0039		1R5D39		MCB463	MS-239	
C72	390	500	65B21-391	1469-00039	D6-391	5R5T39	811-391	MCB243	MS-339	
C73	680	500	65B21-681	1464-00068	D6-681	1R5T68	811-681		MS-368	
C74	.0047	600		BPD-0047	D6-472	CUB6D47	GP2-333-472	PT6247	6TM-D47	Note 1
C75	.047	600	64B9-9	BPD-05	DF-503	CUB6S47		PT6147	6TM-S47	
C76	.1	600	64B9-7	P688N-1	DF-104	CUB6P1		PT601	6TM-P1	
C77	.047	1000	64A2-30	P1088N-047		CUB16S5		PT1615	10TM-S47	
C78	230	3000	65D10-69							
C79	150	3000	65D10-68	HVD-30-150	DD30-151	V3T15	3KV-151		30GA-T15	
C80	.1	200		P288N-1	DF-104	CUB2P1		PT401	2TM-P1	
C81	50			SI50	D6-500	TP30	GP1K-500	UC-545	5GA-Q5	
C82	10000			BPD-01	DD-103	K082	811-01	DC-511	5HK-S1	
C83	.1	400		P488N-1	DF-104	CUB4P1		PT401	4TM-P1	
C84	10000			BPD-01	DD-103	K082	811-01	DC-511	5HK-S1	
C85A	100			BPD-0001	DD-101	G042	801-101	UC-531	5GA-T1	
B	100			BPD-0001	DD-101	G042	801-101	UC-531	5GA-T1	
C86	100			SI100	D6-101	TP34	GP1K-101	UC-531	5GA-T1	
C87	.01	400		BPD-01	D6-103	CUB4S1	GP3-333-103	PT411	4TM-S1	
C88	5000			BPD-005	DD-502	K080	811-005	DC-525	5HK-D5	
C89	1000			BPD-001	DD-102	K069	801-001	DC-521	5HK-D1	Note 4

Note 1. Not used in some versions.
Note 2. C55 was changed to 1000MMF in Run 16 versions.
Note 3. Some versions may use .22MFD in this application.
Note 4. Some versions use 2000MMF in this application.
† Items C51A, C51B, C51C, R55A, R55B and R55C are combined in one unit.

CONTROLS

ITEM No.	RATING RESISTANCE	RATING WATTS	REPLACEMENT DATA ADMIRAL PART No.	CENTRALAB PART No.	CLAROSTAT PART No.	IRC PART No.	MALLORY PART No.	INSTALLATION NOTES
R1A	1000Ω	½	75B11-28	F1-5	RTV-552	♦ QJ-884	UE64S	Contrast (Panel)
B	1Meg	½		R2-54				Volume (Rear)
C	Switch			KB-1				Attach to R1B.
R2A	2Meg	½	75C13-64	B-76	A47-2Meg-Z	Q13-139	U-55	Tone
B	Shaft		Not Req.	Not Req.	KSS-3	Not Req.	Not Req.	Attach to R2A.
R3A	100KΩ	½	75C13-62	B-40	A47-100K-S	Q11-128	U-41	Brightness
B	Shaft		Not Req.	Not Req.	KSS-3	Not Req.	Not Req.	Attach to R3A.
R4A	200KΩ	½	75C13-63	B-46	A47-200K-S	Q11-129	U-43	Vert. Hold
B	Shaft		Not Req.	Not Req.	KSS-3	Not Req.	Not Req.	Attach to R4A.
R5A	2.5Meg	½	75C20-1	BX-83	A47-2.5Meg-S	Q11-239	SU-565	Height
B	Shaft		Not Req.	Not Req.	FKS-¼	RQ	Not Req.	Attach to R5A.
R6A	3000Ω	½	75C20-7	AB-8	A47-3000-S	Q11-112	U-8	Vert. Linearity
B	Shaft		Not Req.	AK-1	FKS-¼	RQ	Not Req.	Attach to R6A.
R10A	2Meg	½	75B11-24	F1-71	RTV-473	* QJ-569	UF26L	Tone (Panel)
B	1Meg	½		R2-56			UR16-T35 †	Volume tapped at 650K (Rear)

♦ Concentrikit Equivalent: K-7 Kit, Base Elements & Shafts; B17-108 & P17-300 (Panel)
B13-137 & R2-318 (Rear)
76-1 (Switch)

† Universal Replacement (Mallory Exact Duplicate Part No. UE1835).
* Concentrikit Equivalent: K-2 Kit, Base Elements & Shafts; B11-139 & P1-109 (Panel)
B19-137X & R2-127 (Rear)

RESISTORS

ITEM No.	RATING OHMS	RATING WATT	REPLACEMENT DATA ADMIRAL PART No.	IRC PART No.	NOTES
R7	680KΩ	½	60B8-684	BTS-680K	
R8	4700Ω	½	60B8-472	BTS-4700	
R9	820KΩ	½	60B8-824	BTS-820K	
R10	560KΩ	½	60B8-564	BTS-560K	
R11	220KΩ	½	60B8-224		
R12	10KΩ	½	60B8-103		
R13	10KΩ	½	60B8-103		
R14	8200Ω	½	60B8-822	BTS-8200	
R15	82KΩ	½	60B8-823	BTS-82K	
R16	3300Ω	2	60B20-332	BTB-3300	
R17	470Ω	½	60B8-471	BTS-470	
R18	1Meg	½	60B8-105	BTS-1Meg	
R19	15Meg	½	60B8-156	BTS-15Meg	
R20	820KΩ	½	60B8-824	BTS-820K	
R21	470KΩ	½	60B8-474	BTS-470K	
R22	270KΩ	½	60B8-274	BTS-270K	
R23	1000Ω	½	60B8-102	BTS-1000	Note 1
R24	1000Ω	½	60B8-102	BTS-1000	
R25	13KΩ 5%	½	60B7-133		
R26	1000Ω	½	60B8-102	BTS-1000	
R27	56Ω	½	60B8-560	BTS-56	
R38	220KΩ	½	60B8-224	BTS-220K	
R39	27KΩ	½	60B8-273	BTS-27K	
R30	220KΩ	½	60B8-224	BTS-220K	
R31	27KΩ	½	60B8-273	BTS-27K	
R32	10KΩ 5%	½	60B7-103		
R33	1000Ω	½	60B8-102	BTS-1000	
R34	47Ω	½	60B8-470	BTS-47	
R35	1000Ω	½	60B8-102	BTS-1000	
R36	1200Ω	½	60B8-122	BTS-1200	
R37	120Ω	½	60B8-121	BTS-120	
R38	2000Ω	7	61A1-33	PW7-2000	
R39	4700Ω	½	60B8-472	BTS-4700	
R40	100Ω	½	60B8-101	BTS-100	
R41	4700Ω	2	60B20-472	BTB-4700	
R42	15KΩ	½	60B8-153	BTS-15K	
R43	270KΩ	½	60B8-274	BTS-270K	
R44	30KΩ 5%	½	60B7-303	BTS-30K 5%	
R45	1Meg	½	60B8-105	BTS-1Meg	
R46	180KΩ	½	60B8-184	BTS-180K	
R47	180Ω	½	60B8-181	BTS-180	
R48	470Ω	½	60B8-471	BTS-470	
R49	56KΩ	½	60B8-563	BTS-56K	
R50	2700Ω	½	60B8-272	BTS-2700	
R51	470KΩ	½	60B8-474	BTS-470K	
R52	1000Ω	½	60B8-102	BTS-1000	
R53	120Ω	½	60B8-121	BTS-120	
R54	390Ω	½	60B8-391	BTS-390	
R55A	10KΩ			BTS-10K	
B	10KΩ		† 63C6-15	BTS-10K	
C	47KΩ			BTS-47K	
R56	4.7Meg	½	60B8-475	BTS-4.7Meg	
R57	470Ω	½	60B8-471	BTS-470	
R58	27KΩ	1	60B14-273	BTA-27K	
R59	470KΩ	½	60B8-474	BTS-470K	
R60	2Meg 5%	½	60B7-205	BTS-2Meg 5%	
R61	100Ω	½	60B8-101	BTS-100	
R62	1.6Meg5%	½	60B7-165	BTS1.6Meg 5%	
R63	3Meg 5%	½	60B8-305	BTS-3Meg 5%	
R64	220Ω	2	60B20-221	BTB-220	
R65	2.2Meg	½	60B8-225	BTS-2.2Meg	
R66	220KΩ	½	60B8-224	BTS-220K	
R67	47KΩ	½	60B8-473	BTS-47K	
R68	2.2Meg	½	60B8-225	BTS-2.2Meg	
R69	4.7Meg	½	60B8-475	BTS-4.7Meg	
R70	6800Ω	½	60B8-682	BTS-6800	
R71	3300Ω	½	60B8-332	BTS-3300	
R72	3300Ω	½	60B8-332	BTS-3300	
R73	220KΩ	½	60B8-224	BTS-220K	
R74	1.8Meg	½	60B8-185	BTS-1.8Meg	
R75	15KΩ	½	60B8-153	BTS-15K	
R76	150KΩ	½	60B8-154	BTS-150K	Note 2
R77	1.5Meg	½		BTS-1.5Meg	Note 3
R78	100KΩ	½	60B8-104	BTS-100K	
R79	220KΩ	½	60B8-224	BTS-220K	
R80	820Ω	½	60B8-821	BTS-820	

RESIS

ITEM No.	RATING OHMS	RATING WATT	REPLACEMENT DATA ADMIRAL PART No.	IRC PART No.	NOTES
R81	560Ω	½			
R82	560Ω	½			
R83	100KΩ 5%	½	60B7-104		
R84	100KΩ 5%	½	60B7-104		
R85	82KΩ	½	60B8-823		
R86	470KΩ	½	60B8-474		
R87	4.7Meg	½	60B7-475		
R88	5600Ω	½	60B8-562		
R89	1500Ω	½	60B8-152		
R90	150KΩ	½	60B8-154		
R91	3900Ω	½	60B8-392		
R92	100Ω	½	60B8-101		
R93	470KΩ	½	60B8-474		
R94	100Ω	½	60B8-101		
R95	1000Ω	½	60B8-102		
R96	5600Ω	2	60B20-472	BTB-5600	Note 4

Note 1. Used in later production models.
Note 2. Some versions use a 120KΩ ½W res
Note 3. Some versions use a 2.2Meg ½W r
Note 4. Some versions use a 4700Ω 2W res
2W resistors wired in parallel are
Note 5. Not used in some versions.
† Items R55A, R55B, R55C, C51A, C51B,

TRANSFORM

ITEM No.	RATING PRI.	SEC. 1	SEC. 2	SEC. 3	ADMIRAL PART No.
T1	117VAC	540VCT	5V	6.3V	80C35-2
	@1.5A	@.200A	@3A	@10A	

① Parallel and phase 6.3V windings.
② Tape high HV winding.
③ Tape 5V winding.
④ Parallel and phase 6.3V @ 6A windings.
⑤ Tape 6.3V @ 1.2A winding.

TRANSFORMERS

ITEM No.	USE	ADMIRAL PART No.	Halldorson PART No.	Mer PART
T2	Horiz. Output Trans.	79D65-1	FB420 *	
T3	Vert. Output Trans.	79B43-4	Z1900 ①	A-282
T4A	Yoke(90°) Horiz. (18.5MH)	94D87-10 ⑤	DF607 ⑦	MDF-
B	Vert. (37MH)	94D87-8 ⑤⑥		

① Use 15 to 1 turns ratio.
② Drill new mounting hole(s).
③ Cut and tape yellow lead.
④ Connect as auto transformer.
⑤ Includes resistors R81 and R82 and plug Admiral Part N
⑥ Alternate deflection yoke.
⑦ Use original horizontal damping network.

*HORIZONTAL OUTPUT TR

Use Original Width Coil U

	ORIGINAL TERMINAL CONNECTIONS	Halldorson Replacement Connections	Merit Replacement Connections	R Repla Conn
	5	5		
	6	2		
	8	1		
Special Notes →		⑧		

⑧ Filament winding requires 2 turns.

TRANSFORMER

ITEM No.	IMPEDANCE PRI.	SEC.	REPLACEMENT ADMIRAL PART No.	Halldorson PART No.	Merit PART No.
T5	2.5KΩ	3-4Ω	Part of Speaker 78C109-1	Z1001	A3025

SPEA

ITEM No.	RATINGS SIZE	FIELD	V. C. IMP.	REPLACEMENT ADMIRAL PART No.	QUAM PART No
SP1	4"x 6"	PM	3-4Ω	78C109-1 ①	46A1
	4"x 6"	PM	3-4Ω	78C109-2 ②	46A1

COILS

ITEM No.	USE	DC RES. PRI.	SEC.	ADMIRAL PART No.	M PA
L1	Ant. Matching Trans.	0Ω	0Ω		
L2	Ant. Matching Trans.	0Ω	0Ω		
L3	IF Trap	0Ω		94D92-67	
L4A	Ant., RF Mixer Grid, Osc. Coils	0Ω		94D92-52	
B	Ant., RF, Mixer Grid, Osc. Coils	0Ω		94D92-53	
C	Ant., RF, Mixer Grid, Osc. Coils	0Ω		94D92-54	

PARTS LIST AND DESCRIPTIONS (Continued)

RESISTORS (cont)

ITEM No.	RATING OHMS	RATING WATT	REPLACEMENT DATA ADMIRAL PART No.	REPLACEMENT DATA IRC PART No.	NOTES
R81	560Ω	½			
R82	560Ω	½			
R83	100KΩ 5%	½	60B7-104		
R84	100KΩ 5%	½	60B7-104		
R85	82KΩ	½	60B8-823		
R86	470KΩ	½	60B8-474		
R87	4.7Meg	½	60B7-475		
R88	5600Ω	½	60B8-562		
R89	1500Ω	½	60B8-152		
R90	150KΩ	½	60B8-154		
R91	3900Ω	½	60B8-392		
R92	100Ω	½	60B8-101		
R93	470KΩ	½	60B8-474		
R94	100Ω	½	60B8-101		
R95	1000Ω	½	60B8-102		
R96	5600Ω	2	60B20-472	BTB-5600	Note 4

ITEM No.	RATING OHMS	RATING WATT	REPLACEMENT DATA ADMIRAL PART No.	REPLACEMENT DATA IRC PART No.	NOTES
R97	15Ω	1	60B28-52		
R98	270Ω	½	60B8-271		
R99	4.7Ω	½	60B28-11	BW½-4.7	
R100	560Ω	15	61A1-32		
R102	1000Ω	1	60B14-102	BTA-1000	
R103	22KΩ	½	60B8-223	BTS-22K	
R104	12KΩ	2	60B20-123	BTB-12K	
R105	100KΩ 5%	½	60B8-104	BTS-100K	
R106	150Ω	½	60B8-151	BTS-150	
R107	47KΩ	½	60B8-473	BTS-47K	
R108	1Meg	½	60B8-105	BTS-1Meg	
R109	4.7Meg	½	60B8-475	BTS-4.7Meg	
R110	82KΩ	½	60B8-823	BTS-82K	
R111	470KΩ	½	60B8-474	BTS-470K	Note 5
R112	560KΩ	½		BTS-560K	Note 5
R113	680KΩ	½		BTS-680K	Note 5

Note 1. Used in later production models.
Note 2. Some versions use a 120KΩ ½W resistor in this application (part No. 60B8-124).
Note 3. Some versions use a 2.2Meg ½W resistor in this application (Part No. 60B8-225).
Note 4. Some versions use a 4700Ω 2W resistor in this application and in run 17 and higher, two 18KΩ 2W resistors wired in parallel are used.
Note 5. Not used in some versions.
† Items R55A, R55B, R55C, C51A, C51B, C51C, are combined in one unit.

TRANSFORMER (POWER)

ITEM No.	RATING PRI.	RATING SEC. 1	RATING SEC. 2	RATING SEC. 3	REPLACEMENT DATA ADMIRAL PART No.	Halldorson PART No.	Merit PART No.	Stancor PART No.	Thordarson PART No.	Triad PART No.
T1	117VAC @ 1.5A	540VCT @ .200A	5V @ 3A	6.3V @ 10A	80C35-2		P2836 ① ⑤	P8334 ①	26R33 ① ②③	R-62BC ④ ⑤

① Parallel and phase 6.3V windings.
② Tape high HV winding.
③ Tape 5V winding.
④ Parallel and phase 6.3V @ 6A windings.
⑤ Tape 6.3V @ 1.2A winding.

TRANSFORMERS (SWEEP CIRCUITS)

ITEM No.	USE	ADMIRAL PART No.	Halldorson PART No.	Merit PART No.	RCA TYPE No.	Ram PART No.	Stancor PART No.	Thordarson PART No.	Triad PART No.
T2	Horiz. Output Trans.	79D65-1	FB420 *					FLY-77 *	D-49 *
T3	Vert. Output Trans.	79B43-4	Z1900 ①	A-2824 ② ③		V312	A-8141	26S54	A-109X ④
T4A	Yoke(90°) Horiz. (18.5MH)	94D87-10 ⑤	DF607 ⑦	MDF-92 ⑦	235D1 ⑦	Y90F19/43 ⑦	DY-16A ⑦	Y-16 ⑦	Y-41-1 ⑦
B	Vert. (37MH)	94D87-8 ⑤⑥							

① Use 15 to 1 turns ratio.
② Drill new mounting hole(s).
③ Cut and tape yellow lead.
④ Connect as auto transformer.
⑤ Includes resistors R81 and R82 and plug Admiral Part No. 88A18-3.
⑥ Alternate deflection yoke.
⑦ Use original horizontal damping network.

*HORIZONTAL OUTPUT TRANSFORMER CONNECTION DATA

Use Original Width Coil Unless Replacement Type Is Listed

	ORIGINAL TERMINAL CONNECTIONS	Halldorson Replacement Connections	Merit Replacement Connections	RCA Replacement Connections	Ram Replacement Connections	Stancor Replacement Connections	Thordarson Replacement Connections	Triad Replacement Connections
	5	5					4	5
	6	2					3	7
	8	1					1	2
Special Notes →		⑧					⑧	⑧

⑧ Filament winding requires 2 turns.

TRANSFORMER (AUDIO OUTPUT)

ITEM No.	IMPEDANCE PRI.	IMPEDANCE SEC.	REPLACEMENT DATA ADMIRAL PART No.	Halldorson PART No.	Merit PART No.	Stancor PART No.	Thordarson PART No.	Triad PART No.	NOTES
T5	2.5KΩ	3-4Ω	Part of Speaker 78C109-1	Z1001	A3025	A3876	22S45	S-1X	

SPEAKER

ITEM No.	RATINGS SIZE	RATINGS FIELD	RATINGS V. C. IMP.	REPLACEMENT DATA ADMIRAL PART No.	QUAM PART No.	RCA TYPE No.	NOTES
SP1	4"x 6"	PM	3-4Ω	78C109-1 ①	46A1	227S1	① Some models use 2 speakers.
	4"x 6"	PM	3-4Ω	78C109-2 ②	46A1	227S1	② Alternate PM Speaker

COILS (RF-IF)

ITEM No.	USE	DC RES. PRI.	DC RES. SEC.	REPLACEMENT DATA ADMIRAL PART No.	MEISSNER PART No.	MERIT PART No.	MILLER PART No.	NOTES
L1	Ant. Matching Trans.	0Ω	0Ω					
L2	Ant. Matching Trans.	0Ω	0Ω					
L3	IF Trap	0Ω		94D92-67				
L4A	Ant., RF Mixer Grid, Osc. Coils	0Ω		94D92-52				
B	Ant., RF, Mixer Grid, Osc. Coils	0Ω		94D92-53				
C	Ant., RF, Mixer Grid, Osc. Coils	0Ω		94D92-54				
D	Ant., RF, Mixer Grid, Osc. Coils	0Ω		94				
E	Ant., RF, Mixer Grid, Osc. Coils	0Ω		94				
F	Ant., RF, Mixer Grid, Osc. Coils	0Ω		94				
G	Ant., RF, Mixer Grid, Osc. Coils	0Ω		94				
H	Ant., RF, Mixer Grid, Osc. Coils	0Ω		94				
I	Ant., RF, Mixer Grid, Osc. Coils	0Ω		94				
J	Ant., RF, Mixer Grid, Osc. Coils	0Ω		94				
K	Ant., RF, Mixer Grid, Osc. Coils	0Ω		94				
L	Ant., RF, Mixer Grid, Osc. Coils	0Ω		94				
L5	Fil. Choke	0Ω						
L6	Neut. Coil	0Ω		94				
L7	RF Coil	0Ω		94				
L8	Conv. Plate	.7Ω		94				
L9A	27.25MC Trap			72				
B	1st. Sound IF	.1Ω		72				
L10	2nd. Video IF	.4Ω	.4Ω	72				
L11	21.25MC Trap	0Ω		72				
L12	3rd. Video IF	.4Ω	.4Ω	72				
L13	4th. Video IF	.7Ω	.3Ω	72				
L14	Series Peaking Coil	2.9Ω		73				
L15	Series Peaking Coil	5.3Ω		73				
L16	Shunt Peaking Coil	16Ω		73				
L17	4.5MC Trap	4.7Ω		72				
L18	Series Peaking Coil	6Ω		73				
L19	Shunt Peaking Coil	22Ω		73				
L20	Sound IF	4.7Ω		72				
L21	Ratio Det.	3.6Ω	.3Ω CT	72				
L23	Ant. Coil	.5Ω		6				
L24	Osc. Coil	6.5Ω		6				
L25	Input IF	17Ω	17Ω	7				
L26	Output IF	17Ω	17Ω	7				

* Parallel With 4.7KΩ Resistor.
■ Parallel With 18KΩ Resistor.
▲ Parallel With 10KΩ Resistor.

ITEM No.	DC RES. PRI.	DC RES. SEC.	ADMIRAL PART No.
L22	50Ω		94C17-4

ITEM No.	RATINGS TOTAL DIRECT CURRENT	RATINGS D.C. RESISTANCE	RATINGS INDUCTA (0 CURR 1000
L27	.200A	49Ω	1.5HY

ITEM No.	TYPE	RATING	ADMIRA PART
			FUSE
M1 *		½A 250V	

* Used in Chassis 19Y4GF only.

ITEM No.	REPLACEMENT DA ADMIRAL PART No.	ASTATIC PART No. CARTRIDGE	ASTATIC PART No. NEEDLE
M2			

ELECTRO-VOICE NEEDLE LISTINGS
CARTRIDGES LISTED. FOR ORIGINAL

(FOR REPLACE

ITEM No.	ADMIRAL PART No.	JENSEN PART N
M3		* JP-35 o † JPS-35 o ♦† JPS-35S ♦ JPS-35D

ITEM No.	SPRAGUE PART No.	NOTES
	2TM-P1	Note 1
	5HK-D5	
	5GA-Q5	
	5HK-D5	Note 2
	5HK-S1	
	6TM-D47	
5	5GA-T15	
	5HK-S1	
	5HK-D5	
	MS-222	
7		
	MB-D1	
	6TM-D1	
	6TM-D1	
7	5HK-D47	
	10HKB-S15	
3	MS-239	
3	MS-339	
	MS-368	
	6TM-D47	Note 1
	6TM-S47	
	6TM-P1	
	10TM-S47	
	30GA-T15	
	2TM-P1	
5	5GA-Q5	
	5HK-S1	
	4TM-P1	
	5HK-S1	
	5GA-T1	
	5GA-T1	
	5GA-T1	
	4TM-S1	
5	5HK-D5	
	5HK-D1	Note 4

INSTALLATION NOTES
Contrast (Panel)
Volume (Rear)
Attach to R1B.
Tone
Attach to R2A.
Brightness
Attach to R3A.
Vert. Hold
Attach to R4A.
Height
Attach to R5A.
Vert. Linearity
Attach to R6A.
Tone (Panel)
Volume tapped at 650K (Rear)

ACEMENT DATA IRC PART No.	NOTES
05 BTS-1Meg	
4 BTS-180K	
1 BTS-180	
71 BTS-470	
63 BTS-56K	
72 BTS-2700	
74 BTS-470K	
02 BTS-1000	
21 BTS-120	
91 BTS-390	
-15 BTS-10K	
-15 BTS-10K	
-15 BTS-47K	
75 BTS-4.7Meg	
71 BTS-470	
273 BTA-27K	
74 BTS-470K	
05 BTS-2Meg 5%	
01 BTS-100	
55 BTS1.6Meg 5%	
05 BTS-3Meg 5%	
221 BTB-220	
25 BTS-2.2Meg	
24 BTS-220K	
73 BTS-47K	
25 BTS-2.2Meg	
75 BTS-4.7Meg	
82 BTS-6800	
32 BTS-3300	
32 BTS-3300	
24 BTS-220K	
15 BTS-1.8Meg	
53 BTS-15K	
54 BTS-150K	Note 2
BTS-1.5Meg	Note 3
04 BTS-100K	
24 BTS-220K	
21 BTS-820	

IPTIONS (Continued)

S (cont)

ITEM No.	RATING OHMS	RATING WATT	REPLACEMENT DATA ADMIRAL PART No.	REPLACEMENT DATA IRC PART No.	NOTES
R97	15Ω	1	60B28-52		
R98	270Ω	½	60B8-271		
R99	4.7Ω	½	60B28-11	BW½-4.7	
R100	560Ω	15	61A1-32		
R102	1000Ω	1	60B14-102	BTA-1000	
R103	22KΩ	½	60B8-223	BTS-22K	
R104	12KΩ	2	60B20-123	BTB-12K	
R105	100KΩ 5%	½	60B8-104	BTS-100K	
R106	150Ω	½	60B8-151	BTS-150	
R107	47KΩ	½	60B8-473	BTS-47K	
R108	1Meg	½	60B8-105	BTS-1Meg	
R109	4.7Meg	½	60B8-475	BTS-4.7Meg	
R110	82KΩ	½	60B8-823	BTS-82K	
R111	470KΩ	½	60B8-474	BTS-470K	Note 5
R112	560KΩ	½		BTS-560K	Note 5
R113	680KΩ	½		BTS-680K	Note 5

n this application (part No. 60B8-124).
in this application (Part No. 60B8-225).
n this application and in run 17 and higher, two 18KΩ

are combined in one unit.

(POWER)

REPLACEMENT DATA Halldorson PART No.	Merit PART No.	Stancor PART No.	Thordarson PART No.	Triad PART No.
	P2836 ① ⑤	P8334 ①	26R33 ① ②③	R-62BC ④ ⑤

EP CIRCUITS)

PLACEMENT DATA RCA TYPE No.	Ram PART No.	Stancor PART No.	Thordarson PART No.	Triad PART No.
	V312	A-8141	FLY-77 * 26S54	D-49 * A-109X ④
35D1 ⑦	Y90F19/43 ⑦	DY-16A ⑦	Y-16 ⑦	Y-41-1 ⑦

18-3.

ORMER CONNECTION DATA

eplacement Type Is Listed

Ram Replacement Connections	Stancor Replacement Connections	Thordarson Replacement Connections	Triad Replacement Connections
		4	5
		3	7
		1	2
		⑧	⑧

DIO OUTPUT)

r o.	Thordarson PART No.	Triad PART No.	NOTES
	22S45	S-1X	

R

RCA TYPE No.	NOTES
27S1	① Some models use 2 speakers.
227S1	② Alternate PM Speaker

-IF)

MENT DATA R	MERIT PART No.	MILLER PART No.	NOTES

COILS (cont)

ITEM No.	USE	DC RES. PRI.	DC RES. SEC.	REPLACEMENT DATA ADMIRAL PART No.	MEISSNER PART No.	MERIT PART No.	MILLER PART No.	NOTES
D	Ant., RF, Mixer Grid, Osc. Coils	0Ω		94D92-55				
E	Ant., RF, Mixer Grid, Osc. Coils	0Ω		94D92-56				
F	Ant., RF, Mixer Grid, Osc. Coils	0Ω		94D92-57				
G	Ant., RF, Mixer Grid, Osc. Coils	0Ω		94D92-58				
H	Ant., RF, Mixer Grid, Osc. Coils	0Ω		94D92-59				
I	Ant., RF, Mixer Grid, Osc. Coils	0Ω		94D92-60				
J	Ant., RF, Mixer Grid, Osc. Coils	0Ω		94D92-61				
K	Ant., RF, Mixer Grid, Osc. Coils	0Ω		94D92-62				
L	Ant., RF, Mixer Grid, Osc. Coils	0Ω		94D92-63				
L5	Fil. Choke	0Ω						
L6	Neut. Coil	0Ω		94D92-68				
L7	RF Coil	0Ω		94D92-69				
L8	Conv. Plate	.7Ω		94D92-64				
L9A	27.25MC Trap			72C132-5				
B	1st. Sound IF	.1Ω		72C132-6				Includes Resistor And Cap.
L10	2nd. Video IF	.4Ω	.4Ω	72C132-4				
L11	21.25MC Trap	0Ω		72C132-3				
L12	3rd. Video IF	.4Ω	.4Ω	72C132-2				
L13	4th. Video IF	.7Ω	.3Ω	72B152-2				
L14	Series Peaking Coil	2.9Ω		73A24-2	19-3036	TV-180	6176	35 Microhenries.
L15	Series Peaking Coil	5.3Ω		73B5-26	19-3180 *	TV-184 *	6180 *	188 Microhenries; Wound On 4.7KΩ Resistor.
L16	Shunt Peaking Coil	16Ω		73B5-25	19-3500		6174	505 Microhenries.
L17	4.5MC Trap	4.7Ω		72C132-1				
L18	Series Peaking Coil	6Ω		73B5-14	19-3250 ■	TV-185 ■	6181 ■	254 Microhenries; Wound On 18KΩ Resistor.
L19	Shunt Peaking Coil	22Ω		73A11-1			6156 ▲	790 Microhenries; Wound On 10KΩ Resistor.
L20	Sound IF	4.7Ω		72C132-1				
L21	Ratio Det.	3.6Ω	.3Ω CT	72C68-2	17-1033	TV-110	1498	Tertiary Winding - .8Ω.
L23	Ant. Coil	.5Ω		69B207-1				
L24	Osc. Coil	6.5Ω		69A52-11				Tapped ⓐ .7Ω.
L25	Input IF	17Ω	17Ω	72C28-7	16-6758	BC-352	12-C1	
L26	Output IF	17Ω	17Ω	72C28-7	16-6758	BC-353	12-C2	

* Parallel With 4.7KΩ Resistor.
■ Parallel With 18KΩ Resistor.
▲ Parallel With 10KΩ Resistor.

TRANSFORMER (HORIZ. OSC.)

ITEM No.	DC RES. PRI.	DC RES. SEC.	REPLACEMENT DATA ADMIRAL PART No.	MEISSNER PART No.	MERIT PART No.	MILLER PART No.	RCA TYPE No.	Ram PART No.	Thordarson PART No.	NOTES
L22	50Ω		94C17-4							

FILTER CHOKE

ITEM No.	RATINGS TOTAL DIRECT CURRENT	RATINGS D.C. RESISTANCE	RATINGS INDUCTANCE (0 CURRENT 1000 ∿)	REPLACEMENT DATA ADMIRAL PART No.	Halldorson PART No.	Merit PART No.	Stancor PART No.	Thordarson PART No.	Triad PART No.
L27	.200A	49Ω	1.5HY	74B18-14	C5040	C2994	C2327	26C41	C-21X

FUSES

ITEM No.	TYPE	RATING	REPLACEMENT DATA ADMIRAL PART No. FUSE	ADMIRAL HOLDER	LITTELFUSE PART No. FUSE	LITTELFUSE HOLDER	BUSS PART No. FUSE	BUSS HOLDER
M1 *		½A 250V						

* Used in Chassis 19Y4GF only.

PHONO CARTRIDGE

ITEM No.	REPLACEMENT DATA ADMIRAL PART No.	ASTATIC PART No. CARTRIDGE	ASTATIC PART No. NEEDLE	ELECTRO-VOICE PART No. CARTRIDGE	ELECTRO-VOICE PART No. NEEDLE	REMARKS
M2				0147	S-1 or 0-3	

ELECTRO-VOICE NEEDLE LISTINGS SHOWN ABOVE ARE SPECIFIED FOR THE RESPECTIVE REPLACEMENT CARTRIDGES LISTED. FOR ORIGINAL CARTRIDGE NEEDLE REPLACEMENTS SEE BELOW.

PHONO NEEDLE

(FOR REPLACEMENT IN ORIGINAL EQUIPMENT CARTRIDGE)

ITEM No.	REPLACEMENT DATA ADMIRAL PART No.	JENSEN PART No.	PERMO PART No.	WALCO PART No.	REMARKS
M3		* JP-35 or † JPS-35 or ♦† JPS-35SD or ♦ JPS-35D	* AC-497 or † AC-498 or ♦† AC-498 D1 or ♦ AC-498D	* W-35TPA or † W-35TPS or ♦† W-35DS or ♦ W-35TPD	* Metal † Jewel ♦ Diamond

PARTS LIST AND DESCRIPTIONS (Continued)

MISCELLANEOUS

ITEM No.	PART NAME	ADMIRAL PART No.	NOTES
M4	Dial Light	81A1-12	#51
M5	Tuner	94D92-8	VHF
M6	Switch	76A31-2†	Local-Distant (DPDT-Rotary, Wafer Type) Mounts On Front Of Set.
M7	Integrator	63C9-1	Vertical - Centralab Part #PCT-104; Sprague Part #103C12.
M8	Printed Circuit Board	A4861-4	Video IF
M9	Printed Circuit Board	A4864-2	Sync
M10	Centering Device	94A71-1	
M11	Ion Trap	94A15-4	
M12	Dial Light	81A1-8	#47
M13	Dial Light	81A1-8	#47
M14	Tuning Cap.	68B65 *	2 Gang (11-50MMF; 18-125MMF).
M15	Switch	77B49	Selector (Rotary, Wafer Type).
	Trimmer Cap.	66A33-1	Ant. Trimmer (2.5-30MMF).
	Trimmer Cap.	66A30-3	Horiz. Drive (170-780MMF).
	Cabinet	35E350-2	Model K23A6
	Cabinet	35E350-3	Model K23A7
	Knob	33D165-11	Contrast
	Knob	33D165-10	Fine Tuning
	Knob	33A171-2	Local-Distant
	Knob	33D165-15	On-Off-Volume (Maroon With Gold Trim).
	Knob	33D165-93	On-Off-Volume (Beige With Gold Trim).
	Knob	33D165-117	On-Off-Volume (Green With Gold Trim).
	Knob	33D165-14	VHF Channel Selector (Maroon With Gold Trim).
	Knob	33D165-92	VHF Channel Selector (Beige With Gold Trim).
	Knob	33D165-116	VHF Channel Selector (Green With Gold Trim).
	Mask	23E220-5	Model K23A6.
	Mask	23E220-2	Model K23A7.
	Safety Glass	21C83-2	
	Knob	33D111-1	Tone (Radio)
	Knob	33D111-2	Tuning (Radio)
	Knob	33D111-14	Selector (Radio)
	Knob	33D111-13	Volume (Radio)
	Dial Pointer	25A1-5	Radio
	Dial Scale	22B32	Radio

† Alternate Part #76A31-1 (Mounts On Side Of Set.)
* Alternate part #68B32.

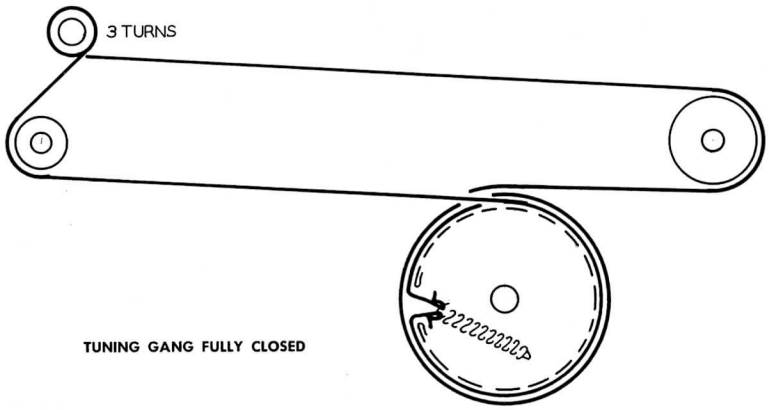

RADIO DRIVE CORD STRINGING

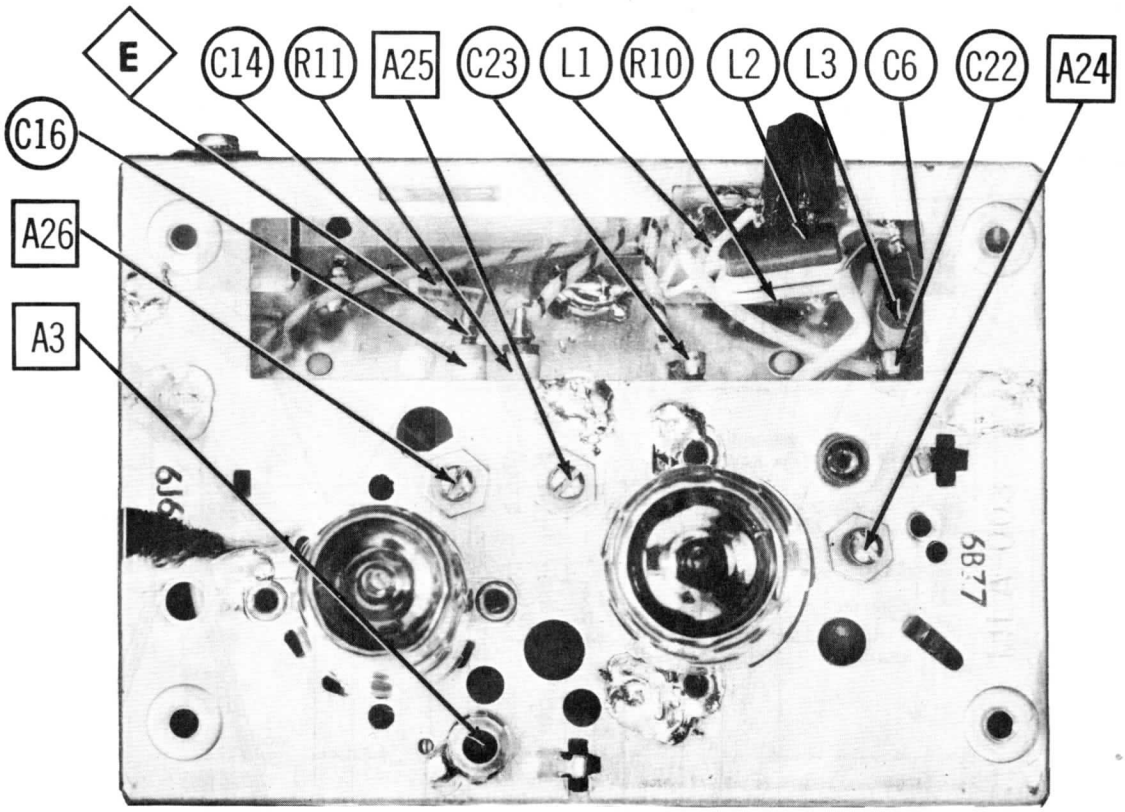

RF TUNER-TOP VIEW

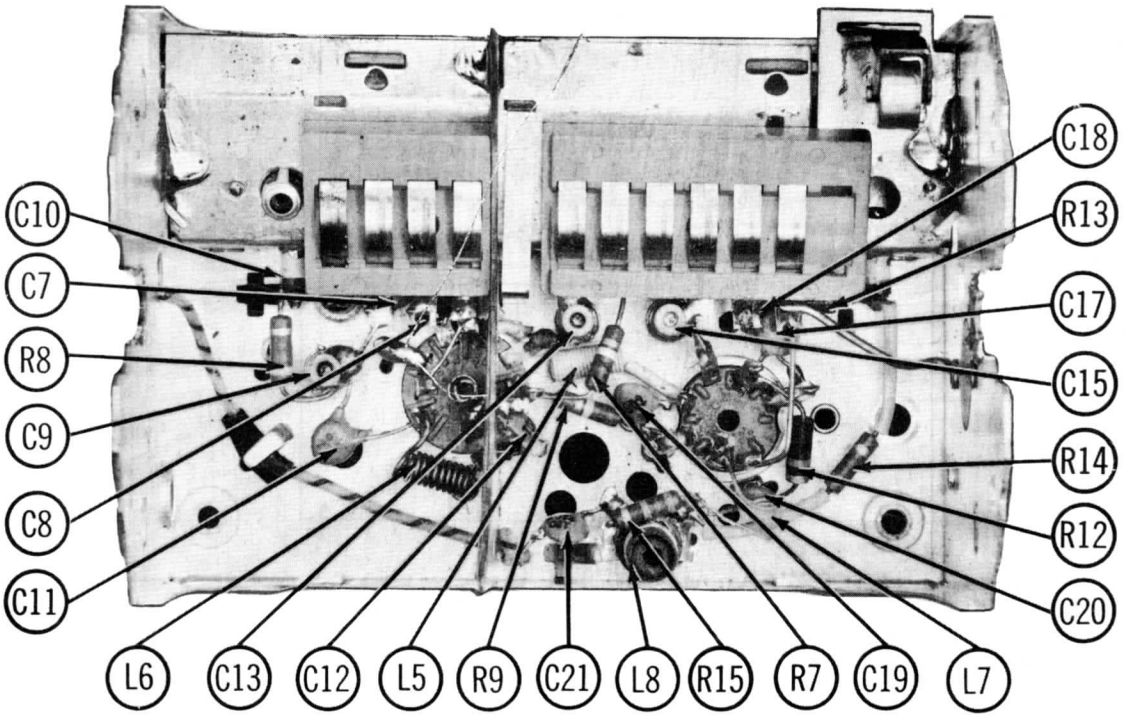

RF TUNER-BOTTOM VIEW

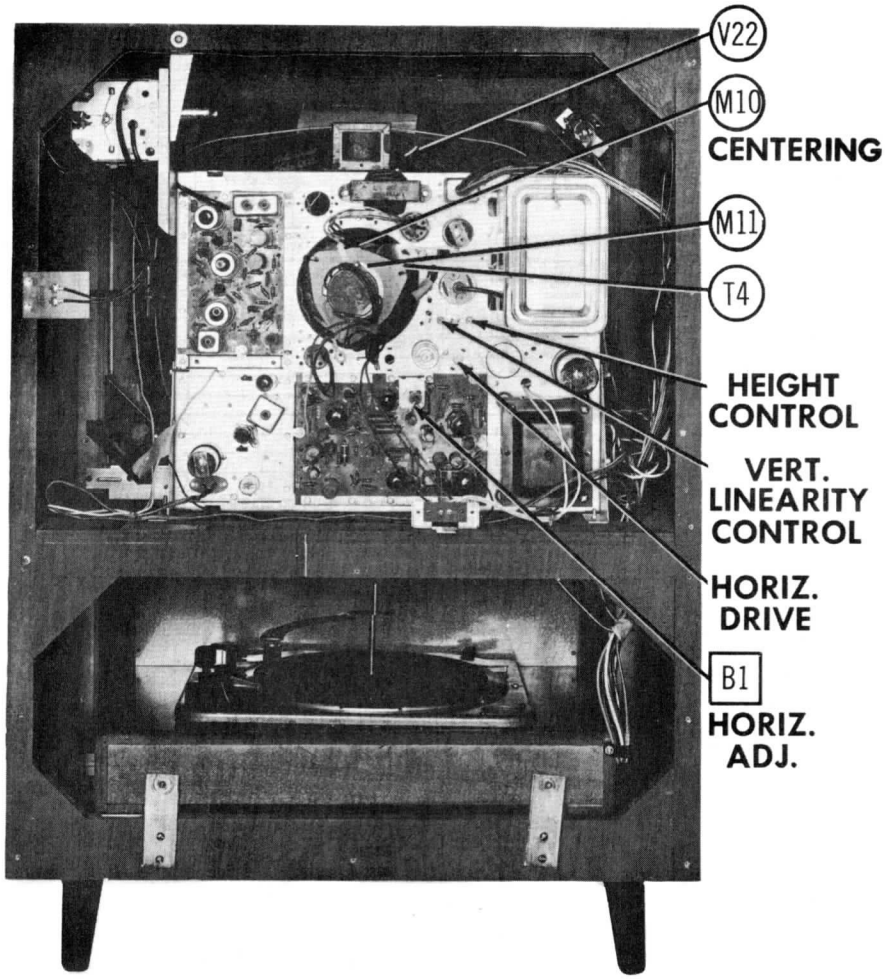

CABINET—REAR VIEW

HORIZONTAL SWEEP CIRCUIT ADJUSTMENTS

1. Turn the set on and tune in a TV station, preferably with a test pattern.

2. Set the brightness and contrast control for a normal picture.

3. Turn the horizontal adjustment slug (B1) clockwise until the picture loses sync. It may be necessary to momentarily switch off channel for picture to lose sync.

4. Turn B1 slowly counter clockwise until the picture just falls into sync.

5. Turn to an unused channel. If vertical lines appear near the center of the screen, slowly adjust the horizontal drive trimmer (B2) counter clockwise until the while lines disappear .

6. If in step 5 the horizontal drive was adjusted, tune in a station and repeat steps 3 and 4. Check horizontal sync by switching off channel and back again.

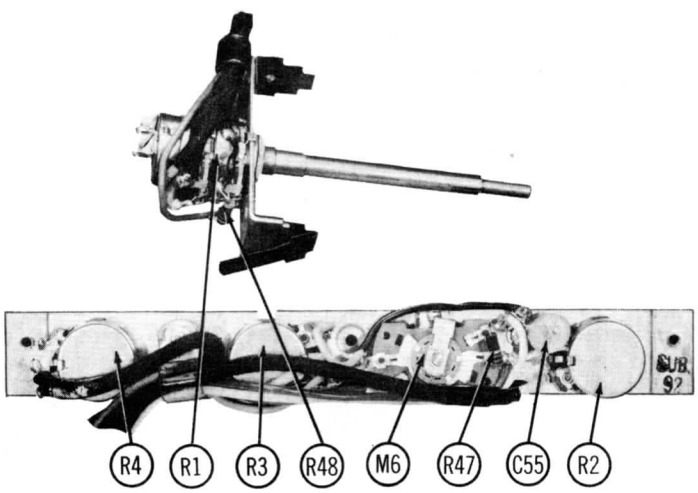

CONTROL ASSEMBLY